UNCLASSIFIED

AD 403 649

Reproduced
by the

DEFENSE DOCUMENTATION CENTER

FOR

SCIENTIFIC AND TECHNICAL INFORMATION

CAMERON STATION, ALEXANDRIA, VIRGINIA

UNCLASSIFIED

NOTICE: When government or other drawings, specifications or other data are used for any purpose other than in connection with a definitely related government procurement operation, the U. S. Government thereby incurs no responsibility, nor any obligation whatsoever; and the fact that the Government may have formulated, furnished, or in any way supplied the said drawings, specifications, or other data is not to be regarded by implication or otherwise as in any manner licensing the holder or any other person or corporation, or conveying any rights or permission to manufacture, use or sell any patented invention that may in any way be related thereto.

AFCRL—63—418

CATALOGED BY ASTIA AS AD No. 403649

ORIGINAL CONTAINS COLOR PLATES: ALL ASTIA REPRODUCTIONS WILL BE IN BLACK AND WHITE. ORIGINAL MAY BE SEEN IN ASTIA HEADQUARTERS.

The A. & M. College of Texas

Department of

OCEANOGRAPHY AND METEOROLOGY

Research Conducted through the

Texas A & M Research Foundation

COLLEGE STATION, TEXAS

AN AUTOMATIC MICROMETEOROLOGICAL DATA-COLLECTION STATION

FINAL REPORT

Prepared by

William H. Clayton, Principal Investigator

ASTIA MAY 8 1963 TISIA

Contract AF 19(604)-6200
Project No. 7655
Task No. 765501

A&M Project 244
Reference 63-7F
February 1963

The research reported in this document has been sponsored by the Geophysics Research Directorate, Air Force Cambridge Research Laboratories, Office of Aerospace Research, United States Air Force, Bedford, Massachusetts.

403 649

Best Available Copy

AFCRL—63-418

THE AGRICULTURAL AND MECHANICAL COLLEGE OF TEXAS
Department of Oceanography and Meteorology
College Station, Texas

AN AUTOMATIC MICROMETEOROLOGICAL DATA-COLLECTION STATION

Report prepared by

William H. Clayton, Principal Investigator

Research conducted through the

Texas A&M Research Foundation
College Station, Texas

Project 244

Contract No. AF 19(604)-6200
Project No. 7655
Task No. 765501

FINAL REPORT

28 February 1963

Prepared for

Geophysics Research Directorate
AIR FORCE CAMBRIDGE RESEARCH LABORATORIES
OFFICE OF AEROSPACE RESEARCH
UNITED STATES AIR FORCE
BEDFORD, MASSACHUSETTS

Requests for additional copies by Agencies of the Department of Defense, their contractors, and other government agencies should be directed to the:

ARMED SERVICES TECHNICAL INFORMATION AGENCY
ARLINGTON HALL STATION
ARLINGTON 12, VIRGINIA

Department of Defense contractors must be established for ASTIA services or have their "need-to-know" certified by the cognizant military agency of their project or contract.

All other persons and organizations should apply to the:

U. S. Department of Commerce
Office of Technical Services
Washington 25, D. C.

OBJECTIVES

The objectives of this study were as follow:

a. To make observations of the variables listed below, using an automatic, mobile, micrometeorological station based on a prototype developed under Contract No. AF 19(604)-4562:

1) Wind speed;

2) Temperature (air and soil);

3) Moisture content (air and soil);

4) Wind direction;

5) Incoming and reflected solar radiation;

6) Incoming and net long-wave radiation.

7) Soil heat transfer and other pertinent soil characteristics;

8) Precipitation, cloud cover, and other standard meteorological parameters;

b. To edit, compile and tabulate all data collected as the result of the observational program.

ABSTRACT

This report reviews the design and operation of an automatic micrometeorological measuring station based on a prototype developed on Contract No. AF 19(604)-4562 for use on Project Green Glow. Full information in the form of description and schematic diagrams sufficient to permit duplication is provided. Also included is a summary of the data collected through 30 November 1962 on the Dallas Tower Network of which this station, located at the KRLD-WFAA television transmitter site near Cedar Hill, Texas, is Station A.

TABLE OF CONTENTS

		Page
Objectives		iii
Abstract		iv
List of Figures		vi
List of Tables		viii
Foreword		ix
1.	Introduction	1
2.	Main Station Design	4
	a. General	4
	b. Temperature Measurements	7
	c. Wind Direction Measurements	34
	d. Wind Speed Measurements	37
	e. Insolation, Albedo, Net Radiation and Soil Heat Flux Measurements	41
	f. Readout System	49
	g. Error Analysis	105
3.	Data Processing	107
4.	Data Summary	112
	Part I	114
	Part II	120
References		126
Personnel		127

LIST OF FIGURES

No.		Page
1	Topographic Map of Dallas Tower Network	3
2	Station A	8
3	Station B	9
4	Station Interior	10
5	Station Interior	11
6	Station A Tower (with WFAA-KRLD TV Tower in Background)	12
7	Main Station Plan	13
8	Signal Flow Block Diagram	14
9	Thermocouple Construction	16
10	Thermocouple Shelters	16
11	Temperature Control Unit	18
12	Thermocouple Selectors	20
13	Thermocouple Calibration Circuit	21
14	Precision Resistor Detail	23
15	Thermocouple Amplifier	25
16	Analog Memory	26
17	Function Generator	28
18	Wet-Bulb Cut-Out Circuit	32
19	Wind Direction Control	35
20	Wind Speed Electronics	38
21	Wind Speed Conversion	39
22	Instrument Amplifier	44
23	Instrument Amplifier Calibration Circuit	46
24	Control Block Diagram	50
25	Timer	58
26	Timing Diagram, Minute Pulses	60
27	Timing Diagram, Five-Second Pulses	61
28a	Calendar Clock	63
28b	Calendar Clock	63
28c	Calendar Clock	64
28d	Calendar Clock	64
29	Main Programmer	68
30	Data Selector	74
31a	DVM Converter	77
31b	DVM Converter	78
32a	Clock Typing Subroutine	83
32b	Digitizer Typing Subroutine	84
32c	Failure Typing Subroutine	85
33	Wind Speed Control Unit Cabling	89
34	Typewriter Punch Junction Box	93
35	Input Converter to Friden Punch	98

LIST OF FIGURES (Continued)

No.		Page
36	Motorized Tape Punch Wiring Schematic	101
37	Punch Parity Error Indicator	102
38	±300v Power Supply over Voltage Protection	102
39	Power Oscillator	103
40	Main 50v Power Supply	104
41	Power Supply for Wind Speed Conversion	104

LIST OF TABLES

No.		Page
1	Temperature System Cabling	33
2	Thermocouple Selectors Cabling	34
3	Wind Direction Control Cabling	37
4a	Wind Speed Electronics Cabling	42
4b	Wind Speed Conversion Cabling	43
5	Printing Format for Any Five-Minute Period	51
6	Punch Card Format for Any Five-Minute Period	53
7	Program Time Sequence	54
8	Timer Cabling	62
9	Calendar Clock Cabling	65
10	Air Program Sequence	69
11	Subroutine A Sequence	71
12	Soil Program Sequence	72
13	Programmer Cabling	73
14	Data Selector Cabling	75
15	DVM Converter Cabling	80
16a	Clock Typing Subroutine Sequence	86
16b	Digitizer Typing Subroutine Sequence	86
16c	Failure Typing Subroutine Sequence	86
17	Typing Subroutines Cabling	91
18	Wind Typer Sequence	92
19	Wind Speed Control Unit Cabling	95
20	Typewriter Punch Junction Box Cabling	96
21	Input Converter for Friden Punch Cabling	99
22	Error Summary Main Station	106
23	Tape Codes Employed	109
24	Data Summary Code	113

FOREWORD

In the preparation of the discussion of the station design the most logical subdivision was felt to be by total parameter-measuring systems. However, further subdivision is provided by the List of Figures in that every figure, with a few obvious exceptions, refers to a single chassis within a given measurement system and each figure follows the page where first reference is made to the chassis schematically represented in the figure. Thus, for example, discussion of the timer, a part of the readout system, will begin on page 57 inasmuch as the timer schematic is given on page 58 as may be seen in the List of Figures.

1. Introduction

The research effort reported herein is not in the strict sense of the word limited to that called for in the contractual guidelines inasmuch as during the period covered by this report a cooperative study jointly sponsored by the Geophysics Research Directorate of the United States Air Force and the United States Army Electronics Research and Development Laboratory was in effect. The objectives of GRD in this cooperative effort are listed on page iii. The objectives of USAELRDL were, for the most part, based on a previous study performed for this agency under Contract DA 36-039 SC-74975. In this latter contract a meteorological model was developed covering the vertical regime from -2 m to 1050 m. However, this model (and an electronic analog computer developed to solve the model)[1] could not be tested except in a qualitative sense due to lack of data. To remedy this situation a network of stations (Dallas Tower Network) was planned which could supply data in sufficiently large blocks and of necessary refinement to test the Low-Level Meteorological Simulator model.

Correctly, then, this report should cover only the efforts of one station (Station A) of this network; however, since another station (Station B) is identical to Station A, and both are based on a prototype previously developed for GRD, the scope of the report has been enlarged to cover not only the design phase of both stations A and B but also the data-collection phases of the total network.

The Dallas, or more correctly, the Cedar Hill, Texas area was chosen as the network site for the following reasons:

a. In the few months preceding the plan to initiate network measurements, wind and temperature instrumentation had been installed on a 1435-ft TV tower at Cedar Hill, thus providing, on a continuous basis, the maximum fixed measurement penetration above the ground available anywhere;

b. The area is sufficiently variable to permit departure from the idealized surface concept without going to terrain and topography extremes;

c. Access and service roads were sufficient to minimize transportation difficulties; and

d. It possessed reasonable proximity to Texas A&M where processing and analyses of the data would be performed.

Following selection of the general area, the primary problem then involved was selection of station sites with regard to spacing and

configuration. Considerable study and investigation were performed in this vein in relation to the objectives sought and funds available, and it was decided to construct a ten-station network of which two stations would be of automatic type and the remaining eight to be strip-chart recorder stations, with the automatic or main stations (A and B) on a nearly north-northwest, south-southeast line passing through the instrumented TV tower (with Station A at the TV tower site) and at a separation of approximately five miles, and with the strip-chart, or outlying stations (C through J), in a square array as shown in Fig. 1.

Thus these ten stations (two automatic or main—A and B—and eight strip-chart—outlying stations C through J) plus the TV tower (WFAA-KRLD) station comprise the Dallas Tower Network.

The actual station sites were selected in the following manner. Suitable sites for the second main station, B, were sought, using a 1:24,000 topographic survey chart prepared by the Coast and Geodetic Survey from which Fig. 1 was prepared. Several sites that appeared to satisfy directional and distance requirements and that had available commercial power were found. Resulting outlying-station sites based on the desired square array for each of these possible main station sites were then checked as to the availability of power, suitability of terrain, and desired variability.

From this map survey four possible station plans were defined and actual interviewing of property owners began, beginning of course with Station B sites. Unfortunately, none of the four possible network plans would work out exactly as outlined on the map, due to one reason or another, and some modification was required. The final choice, as shown in Fig. 1, was based of course on the plan nearest to the ideal situation. As can be seen in this figure, only Station C represents a significant deviation from the pattern. However, this particular station site was found suitable in all respects not only as a secondary station but as a main station as well and it was considered worth the deviation to have a potential main station site that would allow a network area increase of two-and-one-quarter times at a later date if desired.

The TV tower installation, often called the "Dallas Tower" in the literature, is sponsored by GRD and operated by the University of Texas. The remaining ten stations, A through J, are operated by Texas A&M with Station A (located some 400 ft from the TV tower) sponsored by GRD and the remaining stations by USAELRDL under Contract DA 36-039 SC-84942.

1
BELT LINE ROAD
JOHN PENN BRANCH
CEDAR HILL ROAD
BAGGETT
BRANCH
CEDAR HILL ROAD
A
F
G
500
550
600
650
700
750
800
850

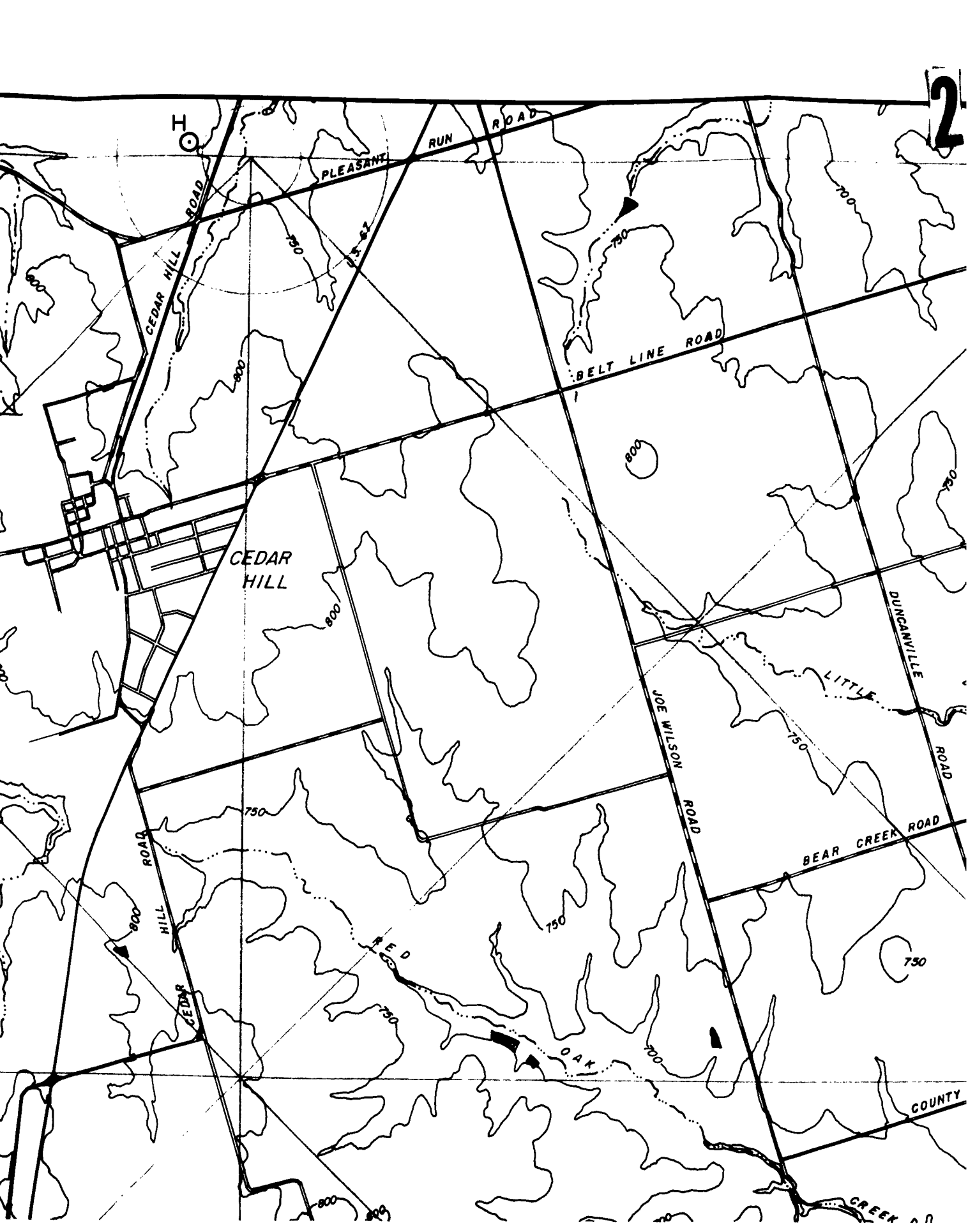
2
PLEASANT RUN ROAD
CEDAR HILL ROAD
U.S. 67
BELT LINE ROAD
CEDAR HILL
DUNCANVILLE ROAD
LITTLE
JOE WILSON ROAD
BEAR CREEK ROAD
CEDAR HILL ROAD
RED OAK
COUNTY
750
800
700

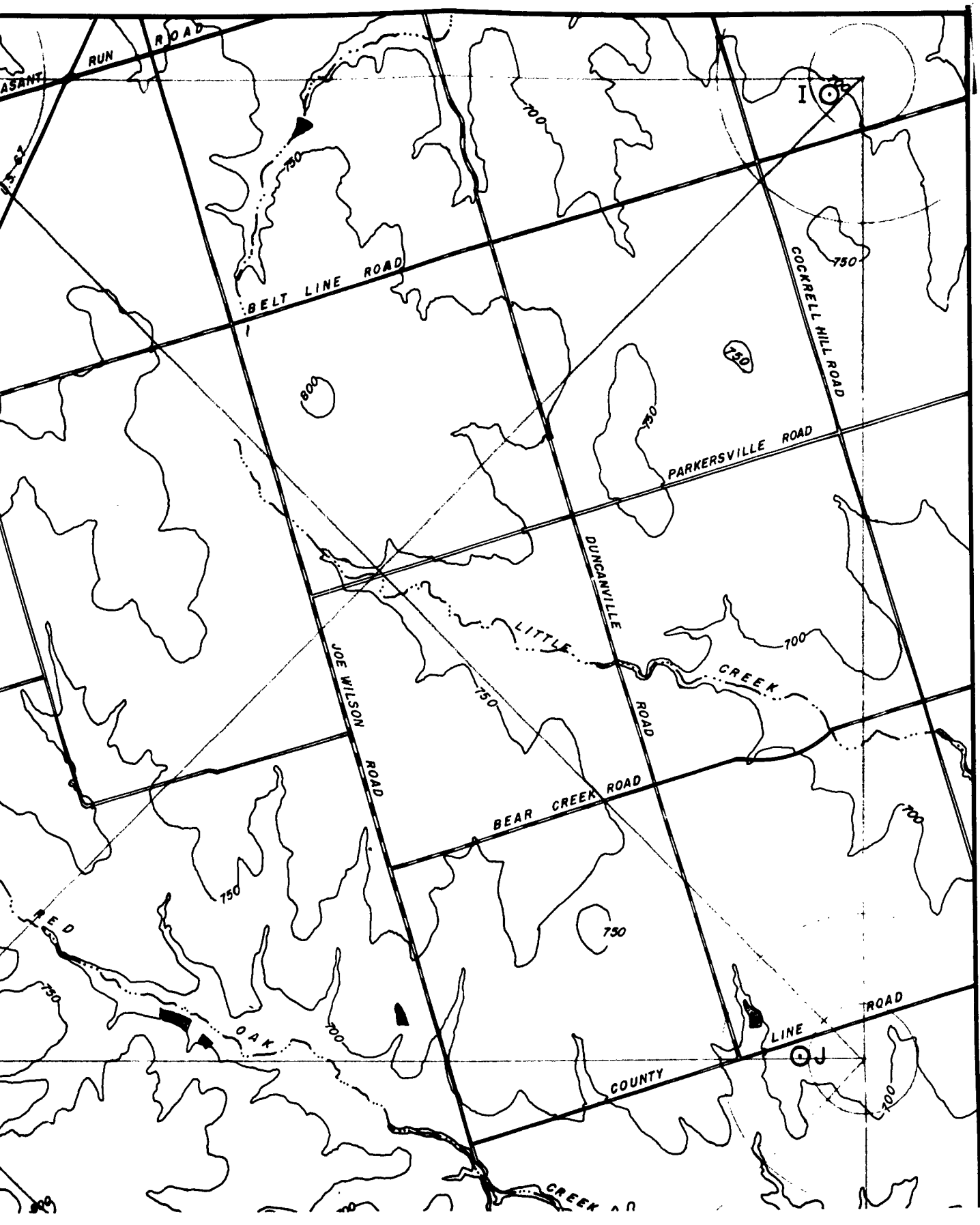
ASANT RUN ROAD
BELT LINE ROAD
COCKRELL HILL ROAD
PARKERSVILLE ROAD
DUNCANVILLE ROAD
JOE WILSON ROAD
BEAR CREEK ROAD
LITTLE CREEK
OAK
LINE ROAD
COUNTY
I
J
700
750
800

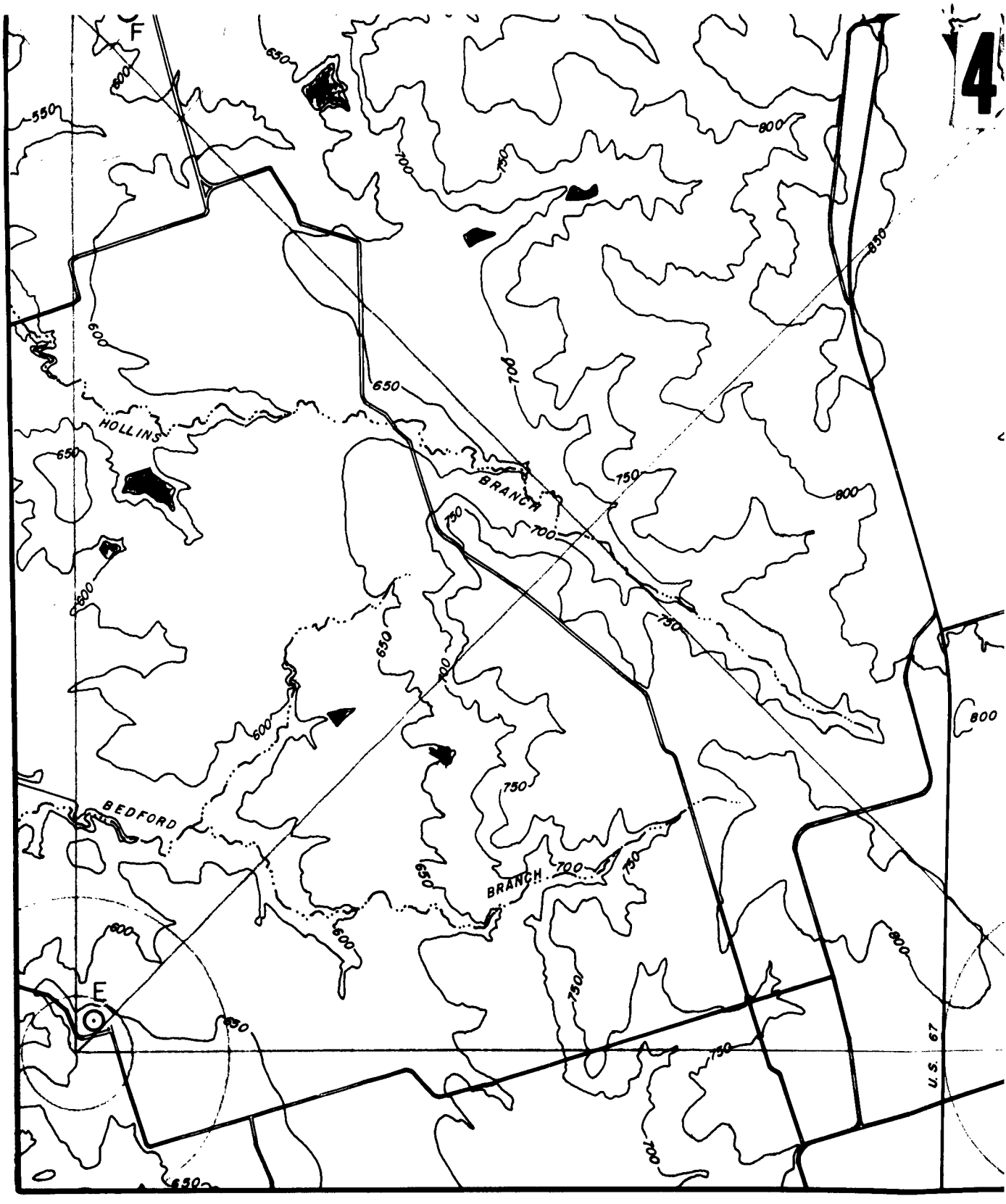
F
E
HOLLINS
BRANCH
BEDFORD
BRANCH
U.S. 67
550
600
650
700
750
800
850

STATION PL

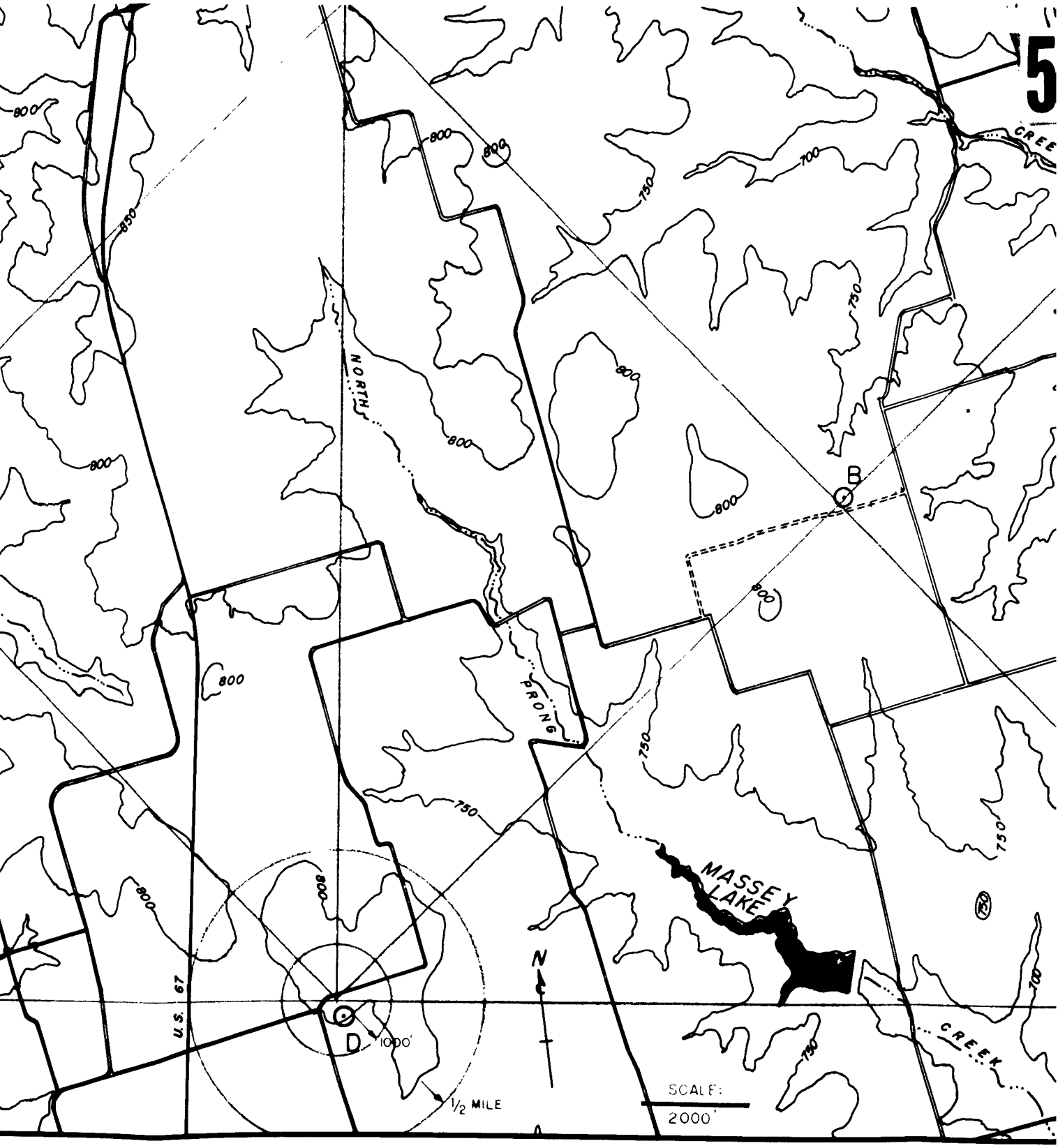

STATION PLAN - DALLAS TOWER PROGRAM

FIGURE 1

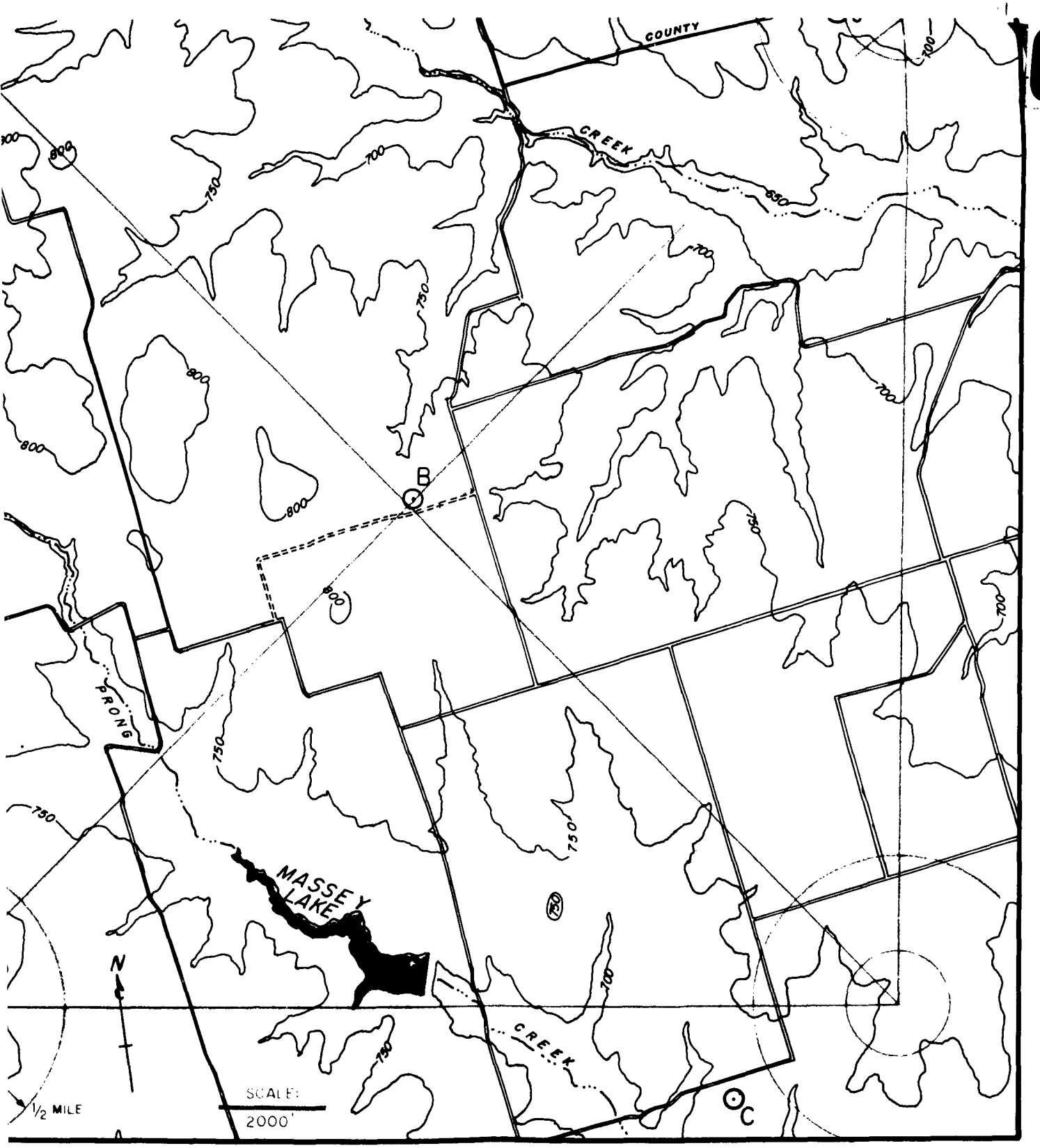

LAS TOWER PROGRAM

2. Main Station Design

a. General

In the discussion which follows, covering the design and operation of the main stations, several conventions have been adopted in the preparation of the schematics to afford simplification of the schematics themselves. These conventions are as follow: All relays other than Potter & Brumfield Type KRP11DG and Clare HGS1005 are marked with the manufacturer's name and model number. The Potter & Brumfield and the Clare relays noted above are marked simply PB or HG respectively. All mercury relays employed in the system are the HGS1005 with the exception of those used in the wind-speed conversion system (Western Electric D168479), and these are to be eliminated in the near future in favor of solid-state circuitry such that the system will employ only one type of mercury relay. Non-electrolytic capacitors used in the system are indicated on the schematics by —||—. Electrolytics are indicated by —|(—. Resistor values shown, unless otherwise indicated, are standard carbon half-watt resistors with 10% tolerance. Thousands of ohms are indicated by K and millions of ohms by M. All diodes not otherwise noted are International Rectifier Type 5M4. All neon bulbs unless otherwise noted are Type 105 Drake Postlite and are mounted on the front panel of the particular chassis under discussion.

In the schematics where circuit lines cross, a dot is used to indicate connection and a loop is used to indicate non-connection. This latter procedure violates standard convention but is felt to be justified in that it gives a positive indication with regard to circuit crossings.

The station plan will be discussed in two parts; the first part will cover the individual parameters and their measuring complex whereas the second part will discuss the readout system common to all parameters. Thus, in the discussion of temperature, for example, the description will begin with the sensor employed and terminate with the analog output of the temperature system. The discussion is presented in this fashion inasmuch as the readout system, which is common to all parameters, is, functionally speaking, completely independent of the parameters, that is, the system could be employed for the measurement of parameters other than those used at stations A and B without any modification whatsoever to the readout system, although of course some modification would be required to amplifier gain, function generation, etc. More directly, the readout system accepts inputs from various sources and assembles these in the prescribed readout pattern without any further modification to the signals themselves other than conversion to digital form.

Following the discussion of the measuring systems and the readout system, an error analysis is also presented. This total information package is believed sufficient to permit construction of a system that would duplicate the function of the described system though not

necessarily the appearance, size or exact configuration. Thus, with normal engineering caution any and all of the systems described can be constructed without worry concerning the precise chassis size, location of the components on the chassis, etc.

As noted earlier, these stations are based on a prototype constructed in 1958 and subsequently described in a technical report,[2] and some consideration was given to the concept of simply showing the differences between the current stations and this prototype. However, with the exception of the sensors used and the outward appearance of the stations, the modifications are of such extent that a discussion of differences would be more complex than a total explanation based on the new system, and therefore this latter procedure will be followed.

The design of these stations was based, of course, primarily on general applications toward micrometeorological research with special emphasis for simulator evaluation procedures. However, several other factors guided construction as well. These are listed below in order to provide understanding as to why a given procedure which might be done in any one of several ways was performed in the manner chosen.

(1) The stations should be completely self-contained with respect to sensors, measuring systems, maintenance, calibration, supporting equipment and power, and should be capable of high mobility;

(2) System outputs should be numerically equivalent to the meteorological input parameters in all cases;

(3) All operations short of major overhaul and maintenance should be possible with relatively unskilled personnel;

(4) All calibration procedures should be repeatable without necessity for modification of the system being calibrated;

(5) All measuring systems should incorporate check-procedures that would permit distinction by unskilled personnel between mere signal indication and correct operation.

For the general requirements of micrometeorological research, the following parameters were considered necessary.

(1) Temperatures—wet- and dry-bulb temperatures at 1/4, 1/2, 1, 2, 4, 8, 16 and 32 meters elevation. Soil temperatures at -3, -6, -12, -25, -40, -65 and -100 centimeters;

(2) Wind speed—at the same elevations used for air temperature determinations;

(3) Wind direction—at any one level between the surface and 32 m;

(4) Soil heat flux—at any one level between 0 and -1 m;

(5) Incoming solar radiation;

(6) Albedo;

(7) Net radiation.

Additional parameters measured by visual or mechanical means are cloud type and amount, barometric pressure, vegetation cover, soil type, and soil moisture.

The trailers housing the measuring equipment are ten-ton military semi-trailer vans (U. S. Army Model SKD3809) of approximate interior dimensions 26 x 8 x 6.2 ft with an over-all height of approximately 13 ft. Modification to the vans beyond painting consisted of installation of five windows, a side door, one air-conditioner port, an interior lining of 1/2-in. plywood, a floor covering of asphalt tile, and carrying-boxes welded to the underside of the floor for transport of cables, sensors, etc. The walls and ceiling are insulated with rock wool.

The tower employed for sensor-placing is of triangular steel construction, 18 in. on a side, made up of eleven 10-ft sections and one 5-ft section for an over-all height of 115 ft (Rohn Model 40G). Triangular guying at 30, 65 and 95 ft is used to support the tower with concrete "dead men" located 75 ft from the tower base as the guy anchors. The guys themselves are 3/8-in. aircraft cable.

The tower base support is a concrete block 2 x 2 x 4 ft, approximately, in which the necessary bolts for securing the tower base platform are embedded.

Erection of the tower is accomplished with a floating ginpole which clamps to successive tower sections as the construction proceeds. The weight per 10-ft tower section is 65 lb.

The instrument arms are made of aluminum channel and 3/4-in. aluminum tubing, with the channel bolted to the tower side as a support for the tubing, which can be moved in and out. The arm installation at any level is so arranged that the anemometer cups and the thermocouples are at the designated sensing elevations with the anemometer attached to the free end of the tubing, 5 ft from the tower side, and the thermal shelter attached to the channel, 18 in. from the tower side.

Power for the vans may be supplied either from commercial sources or by motor-generators with the main supply being 230-115 volts, 60-cycle, single-phase. When operated with a motor-driven generator, a 7.5 kw unit is normally employed and placed some 30 to 40 ft from the vans proper and on the side away from the weather-shelter (containing standard maximum-minimum thermometers and a motor-aspirated psychrometer). Under these conditions, an alternate supply rated at 1 kw is normally located under the front end of the trailer to provide power for the reference junction, lights, small tools, etc. during non-sampling periods. Tie-down rings embedded in the trailer floor provide the necessary security for transport of generators, tower sections, spares, etc.

All sensor lines from the trailers to the sensors are permanently connected and are carried in coiled fashion in road-tight boxes under the trailer floors. The line lengths are such that the tower instrumentation, soil temperature probes, and radiation instrumentation will be 100 ft from the trailer, which is positioned down-wind (prevailing wind) from the tower.

Figures 2, 3, 4 and 5 show exterior and interior views of the trailers in the Dallas Tower Network locations. Figure 6 shows a portion of the Station A and WFAA-KRLD towers.

Figure 7 is a schematic representation of Station A, which is the same as Station B except for orientation and the absence of a radio house at the latter station.

Figure 8 is a block diagram showing signal flow of the various measuring systems.

b. Temperature Measurement

All temperatures are sensed by copper constantan thermocouples (single junction) referenced against 40° $\pm$.003°C. Particular couples are selected through use of stepping-switches contained within a weather-tight, thermally-insulated box located at the base of the tower. Thus, only three pairs of thermocouple lead wires are required to bring the *in situ* temperature signals to the recording point in the vans (one pair each for dry-bulb, wet-bulb, and soil-temperature values).

The thermocouple lead wire is stranded #16 AWG, vinyl-insulated. The copper and constantan leads are twisted together with another vinyl jacket over-all. All thermocouple wire used is, of course, from a single pouring and carefully checked for thermoelectric uniformity. Apart from thermal consideration, a factor responsible for choice of this particular wire type is that it is quite flexible and can be coiled and recoiled without changing its thermoelectric properties. In fact, tests have shown that it can be sharply bent without adverse effect, although such is not done in normal usage.

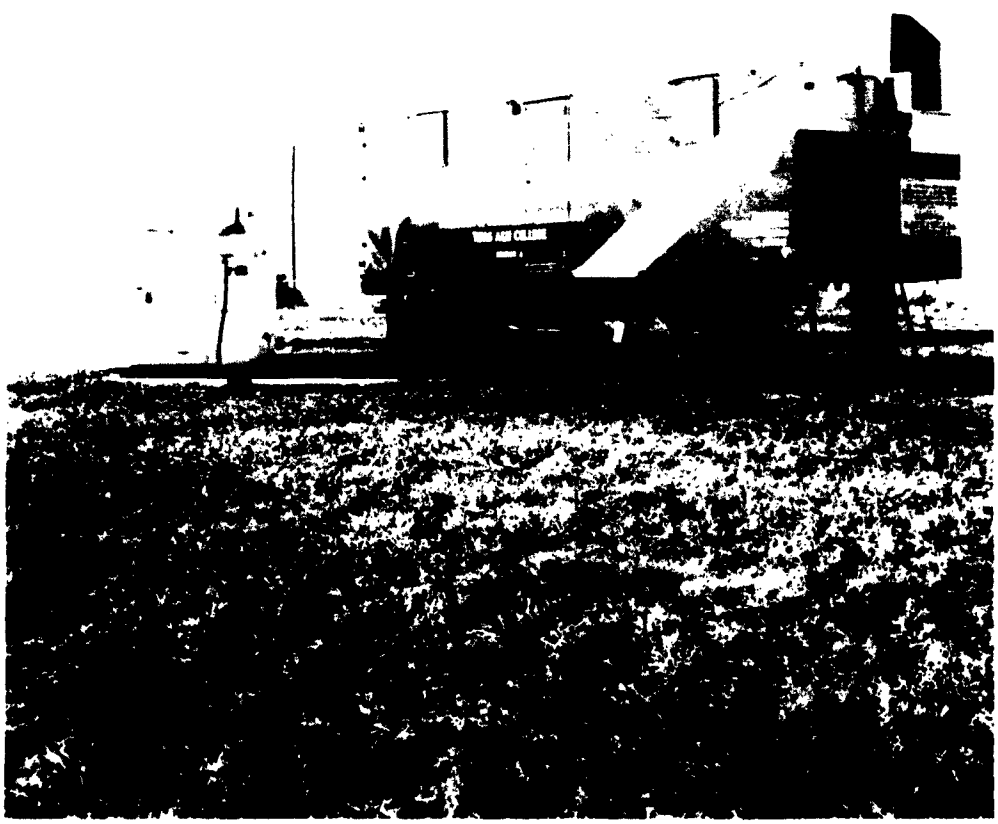

FIGURE 2 STATION A - EXTERIOR VIEW

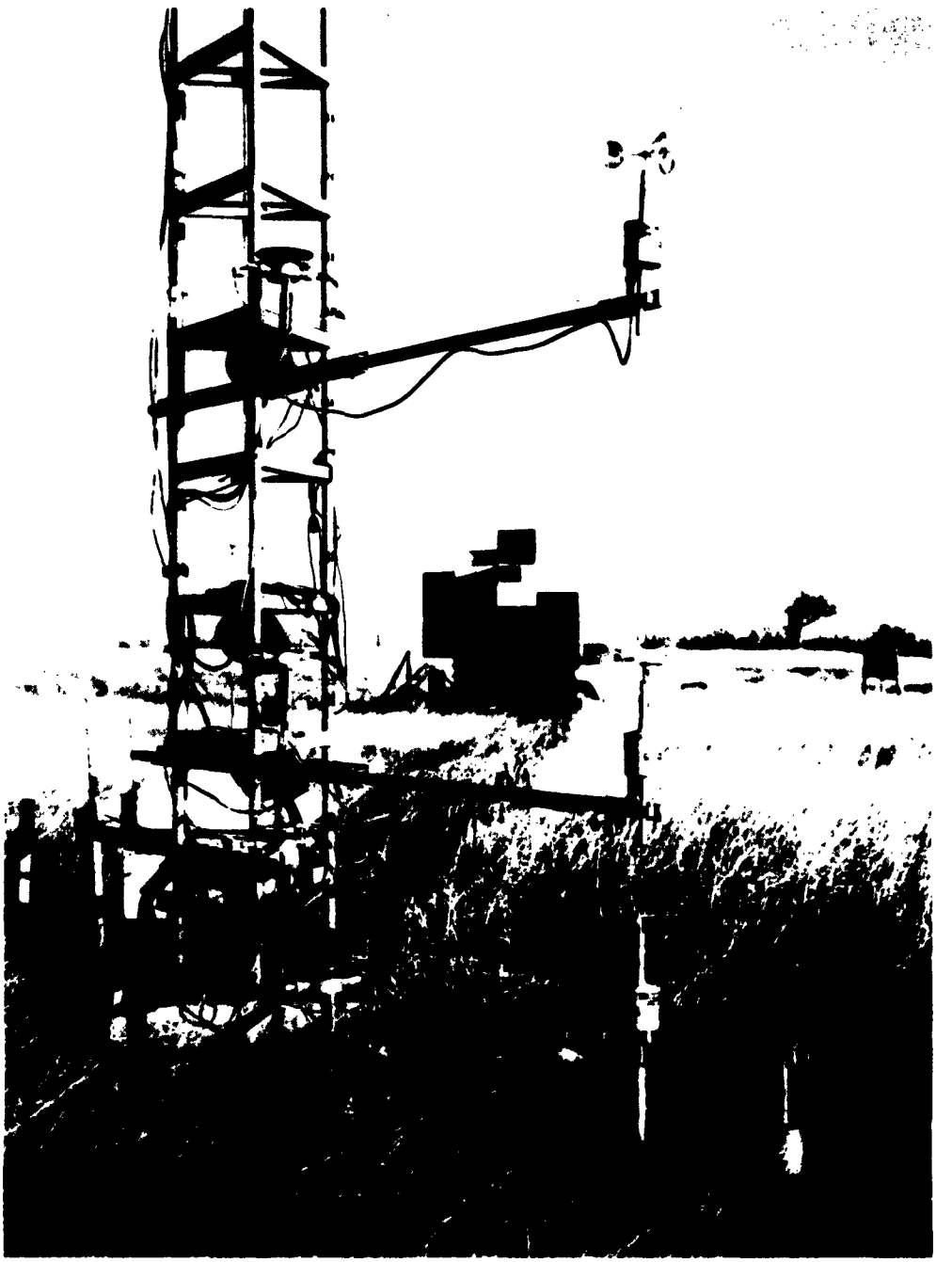

FIGURE 3 STATION B-EXTERIOR VIEW

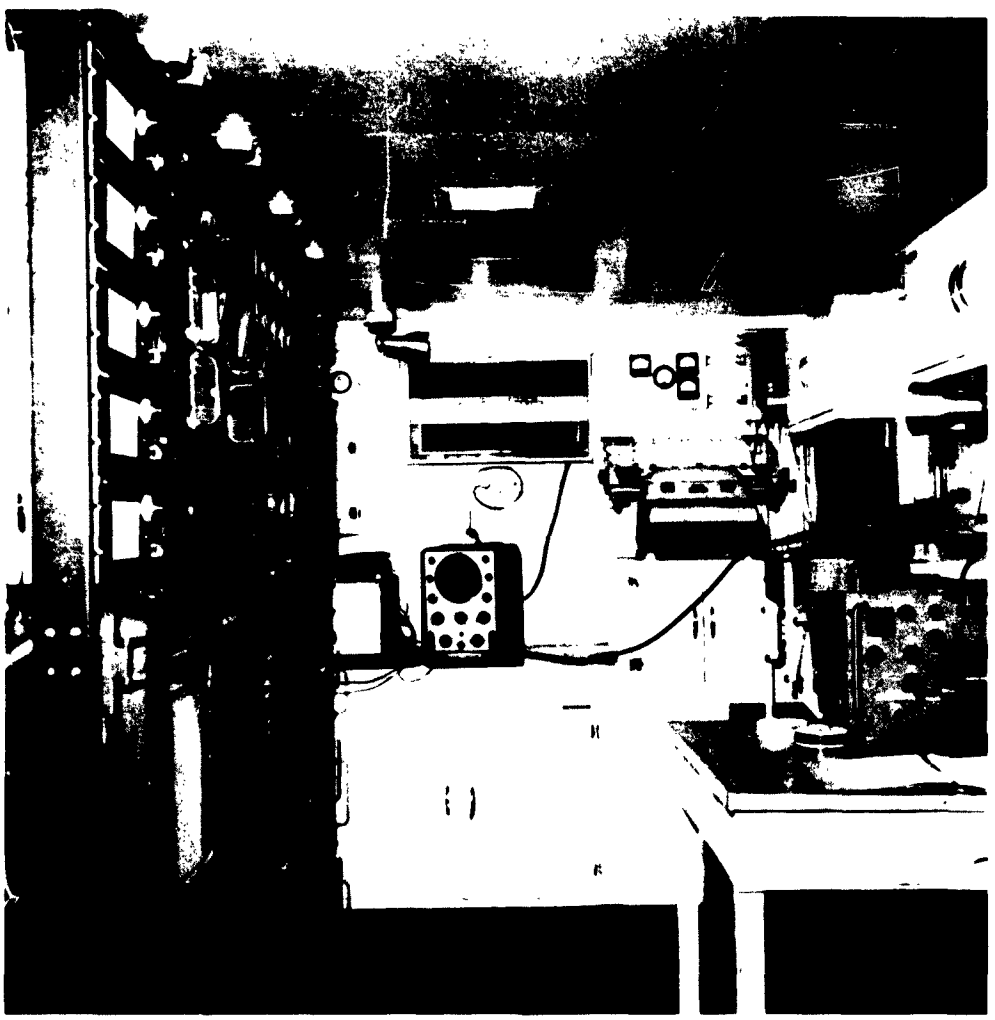

FIGURE 4 STATION INTERIOR

FIGURE 5 STATION INTERIOR

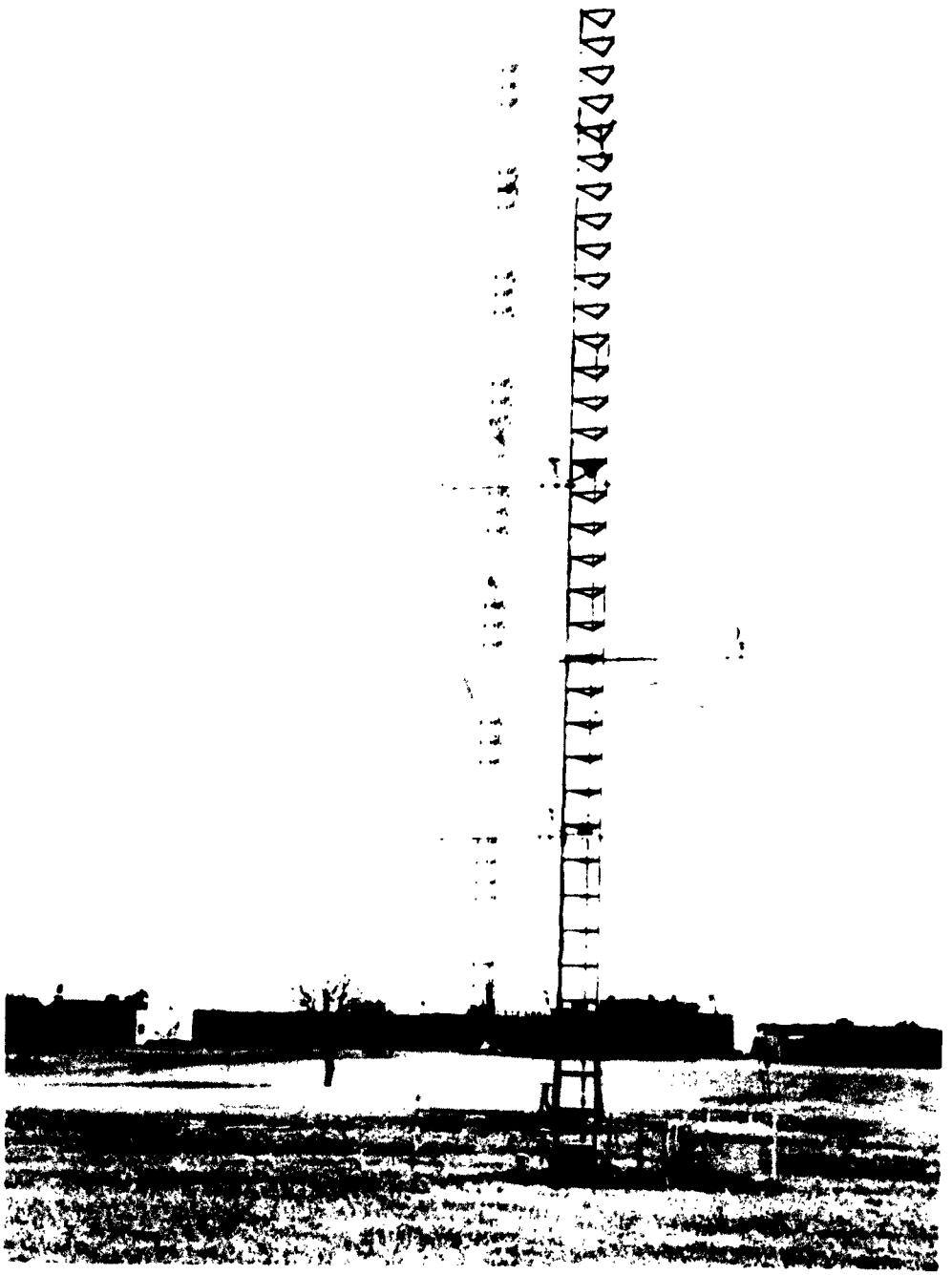

FIGURE 6 STATION A-TOWER

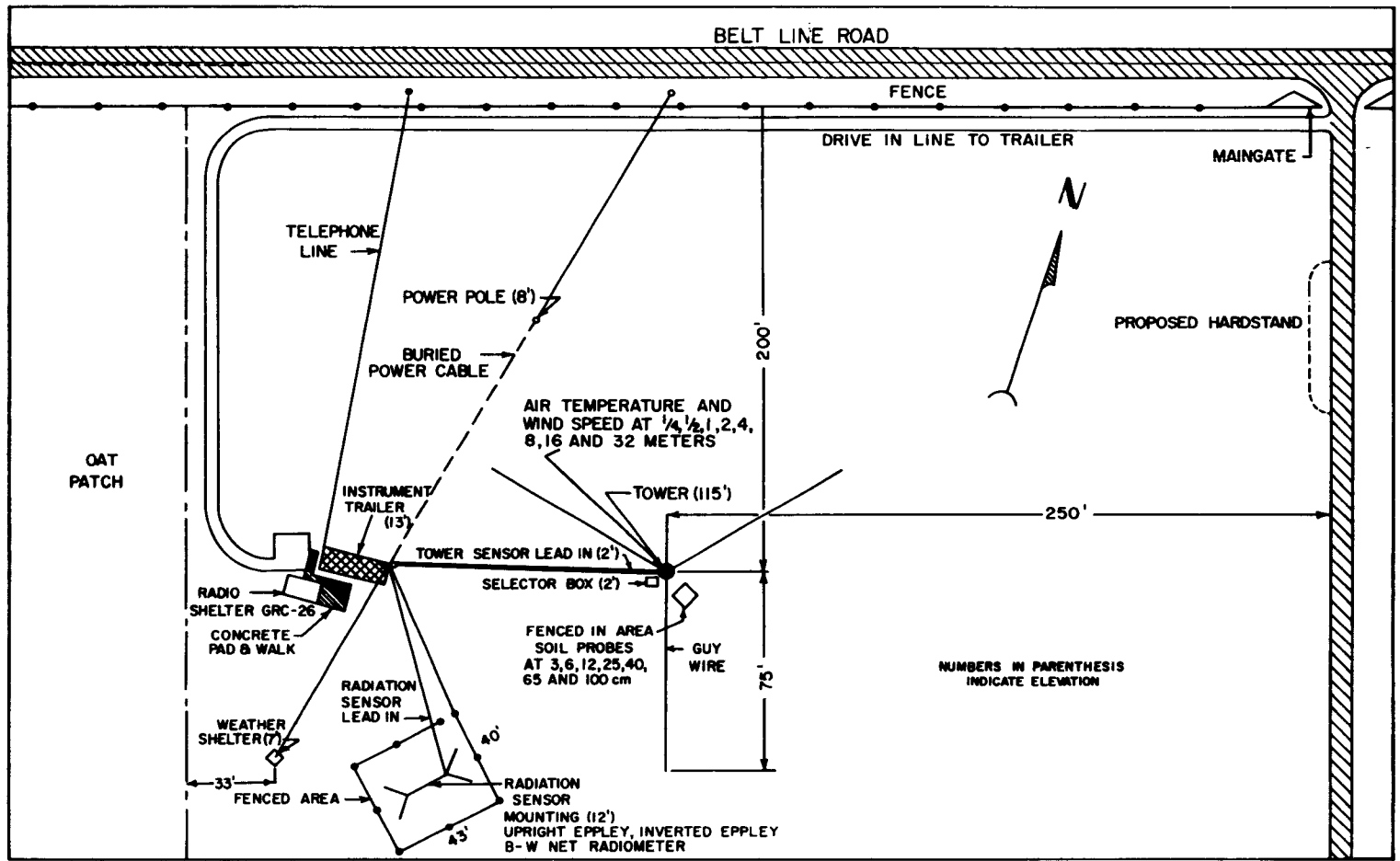

MAIN STATION PLAN
FIGURE 7

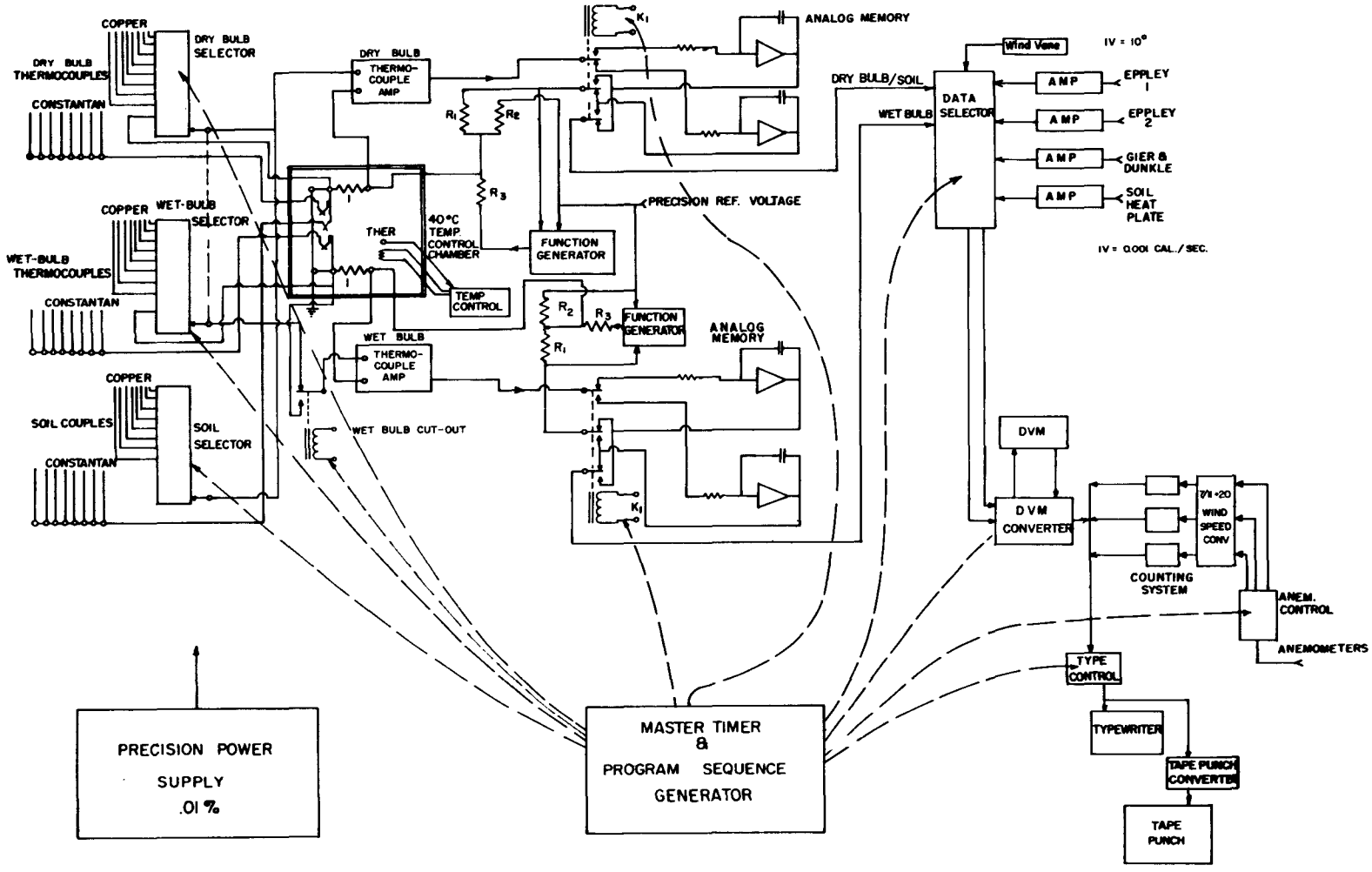

SIGNAL-FLOW BLOCK DIAGRAM

FIGURE 8

The thermocouples themselves are made from the lead wire in the following manner. The outer jacket is stripped back for a distance of 3 in. and the two leads are unwound. The inner vinyl jacket is then stripped from each wire for a distance of 2 in. All of the individual strands excepting one on each lead are then cut even with the insulation. A 1/2-in. piece of insulation is placed on the remaining copper strand, which is then twisted about the constantan strand (three turns) at the free end and soldered. The soldered joint is then trimmed to 1/4-in. and the couple is fitted into a capillary tube (1.5 mm i.d. x 3/4 in.) filled with Glyptal. Figure 9 shows this construction.

This method of constructing thermocouples is quite rapid and can be performed on site without difficulty. It has been carefully and repeatedly checked for reliability by measurement of differential output between bucked couples in a homogeneous temperature bath, and such testing has consistently shown that such differential is on the order of a .2uv maximum, which corresponds approximately to .005°C error. Bath temperatures used in these tests are 5° intervals from 0° to 40°C.

The thermocouple shelter shown in Fig. 10 is scheduled for modification which will probably be completed before final publication of this report and will be discussed below. In this figure all component parts are of aluminum with the exception of the nylon rod in which the thermocouple is mounted, the bushing in the Crause-Hinds connector in which the rod is inserted, the supporting 1/2-in. rod which was formerly of aluminum but later replaced with phenolic, and of course the glass test tube for containing the wet-bulb wick. The proper location of the thermocouples within the shelter housing, accomplished by positioning the drilled nylon rods, is such that the thermocouples are placed directly below the center of the 1 1/2-in. hole in the lower radiation-shield plate with the dry bulb approximately 1/4-in. above the wet bulb. Distilled water is supplied to the wet bulb through the wick which runs from the pyrex test tube through the 1/4-in. hole in the tube cap to the bulb itself. This wick completely encases the glass capillary in which the thermocouple is embedded. Water is brought to the test tube through 1/4-in. plastic tubing from the main reservoir which is a 1-liter polyethylene bottle mounted on the top of a 1/4-in. aluminum plate of the same horizontal area as the tower proper. The aspirating motor is attached to the bottom of this same plate on the tower proper and a 1-in. Tygon tube runs from the aspirating motor to the 3/4-in. aluminum pipe nipple on the thermal shelter. The aspirating motors (Dayton, Model 2C610, 1/30 hp) are rated at 140 cu ft/min and the exhaust from the blower is directed down and away from the thermal shelters.

The planned modifications to the thermal shelters call for the insertion of four baffles between the parallel Alzak aluminum plates and mounted normally to the plates; replacement of the aspirating motors with smaller units which will be mounted directly below the thermal shelter on an approximately 6-in. aluminum nipple of 1-in. diameter, thus eliminating the Tygon tubing, and modification of the test-

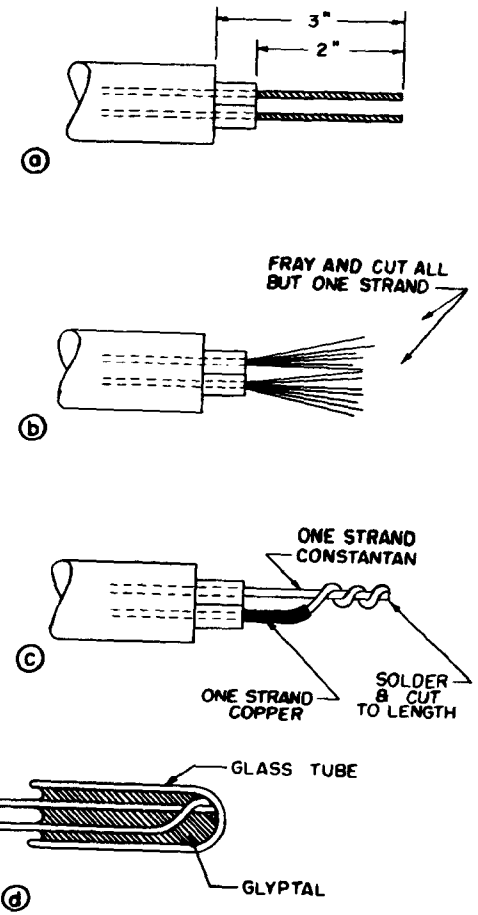

THERMOCOUPLE CONSTRUCTION
FIGURE 9

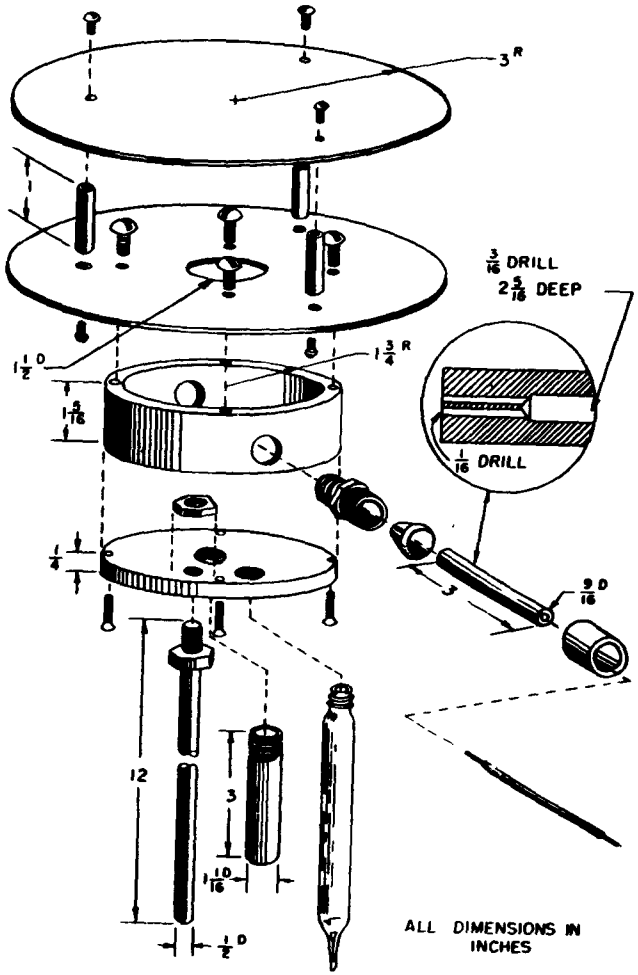

THERMOCOUPLE SHELTERS
FIGURE 10

tube mounting such that the exposed wick length between the top of the test tube and the thermocouple proper will be significantly reduced, thus increasing the wetting potential of the wick itself at the thermocouple.

Soil temperature probes are made exactly as the air probes, except that the whole thermocouple assembly is potted with Glyptal in 12-in. lengths of 5/16-in. copper tubing. The end containing the thermocouple is crimped and soldered; the other end is sealed with pressure-sensitive tape wrapped around the wire and tube for an over-all distance of approximately 3-in.

The soil couples are put in position by excavation to a depth of 1 m, maintaining a vertical wall on one side of the hole. A 5/16-in. rod is then driven horizontally at the proper levels into the vertical wall, withdrawn, and replaced by the soil probe. The hole is then refilled (allowing approximately 3 ft of horizontal extension of each lead wire before bringing it to the surface) and fenced off.

The reference junction employed in the temperature system consists of an aluminum cylinder 6 in. in diameter and 6 in. long in which four thermocouples (dry-bulb, wet-bulb, soil, and one spare), a thermistor detector, and a 1/4-watt heater are contained in 3-in. wells. The thermistor (Veco-51A1) is located in the center with the thermocouples equally spaced on a 1/2-in. radial in a 45° sector. The small heater is located about 1/2-in. away from the thermistor. A precision-grade thermometer, mounted centrally within the block, is employed for checking on the temperature of the reference junction but not as a corrective indicator.

All elements are sealed in the wells, after filling with mercury at 40°C. The cylinder itself is embedded in a thermally-insulated plywood box measuring 18-in. on a side. The insulating material is styrofoam.

The circuitry employed to maintain a constant reference temperature is shown in Fig. 11. As can be seen from this figure, the temperature of the cylinder is sensed by the thermistor, which is one arm of a 60-cycle bridge circuit. The bridge is brought into precise balance at the desired temperature* by adjusting the 20K Helipot and the small trimmer capacitor. The amplified error signal is made ultimately to control a mercury relay by means of a phase-sensitive thyratron stage. The intermediate amplifier stages include a 180-cycle

---

*A 40°C reference temperature was chosen, somewhat arbitrarily, as representing a value well above any anticipated ambient, such that heat loss would always be away from the reference junction. Any value between 38° and 42°C, approximately, is available, without circuit modification, by variation of the 20K Helipot.

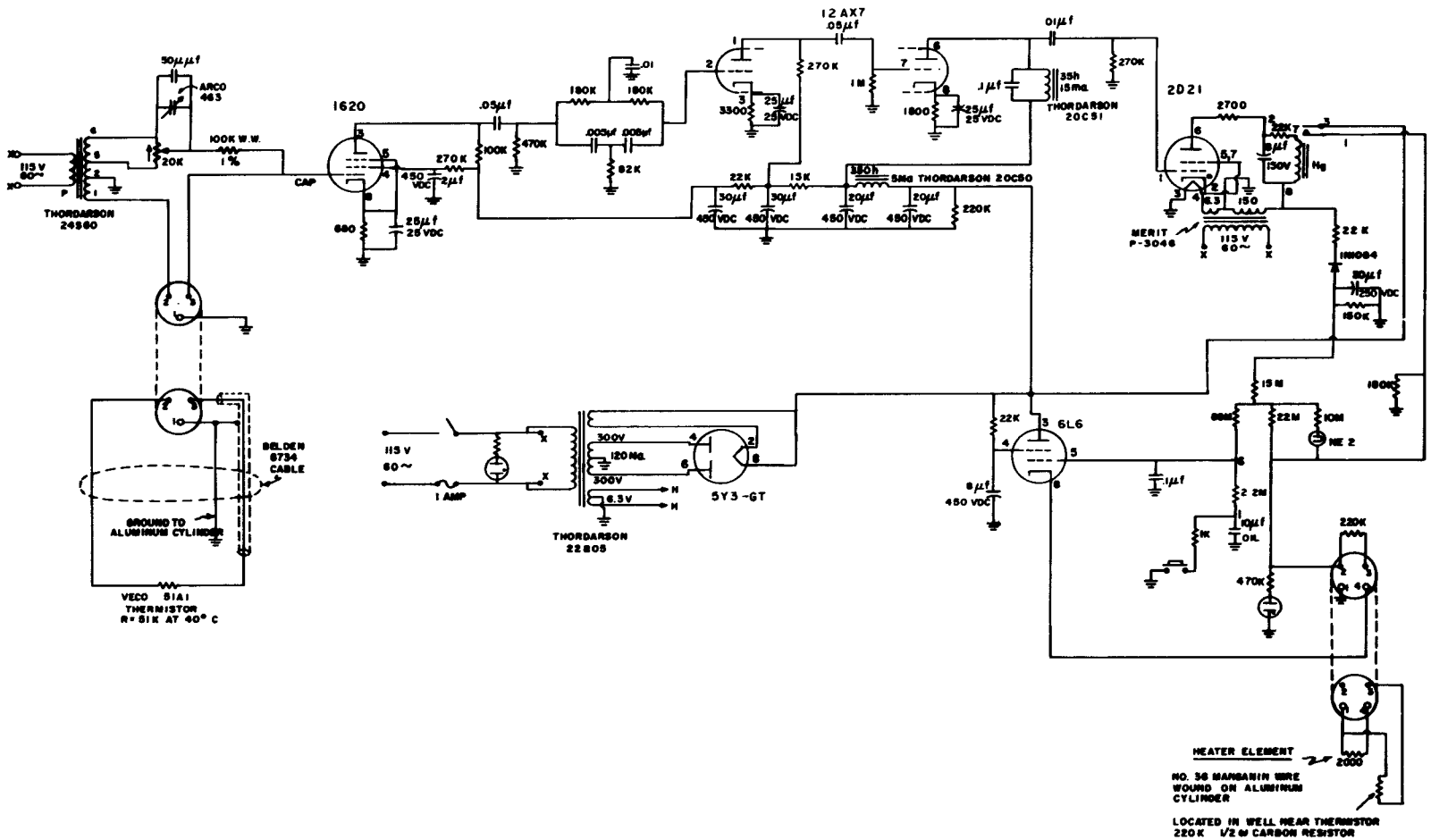

TEMPERATURE CONTROL UNIT

FIGURE II

"Twin-T" and a 60-cycle LC circuit to clean the signal near exact balance, so that a high degree of sensitivity can be achieved. The resulting dead-zone, or hysteresis, is of the order of 10^{-4} °C.

The main heater consists of a 2000-Ω element wound around the outside of the aluminum cylinder and driven from the cathode of a 6L6 tube, with a 1000-sec time-constant circuit between the grid and the control relay. Thus the heating rate is a function of the temperature differential from 40°C.

In operation, the control relay oscillates with a 10- to 18-sec period due primarily to the relative closeness of the thermistor and the small heater which serves as a block against over-shoot by the large heater. The latter is fed relatively smooth "duty-cycle controlled" power with the action of the long-time RC filter. A shorting control is provided for this capacitor in order to minimize oscillations about equilibrium on initial warm-up.

The reference junction has been tested for temperature constancy at various control settings, using a platinum resistance thermometer and a Mueller Bridge, and consistently shows better than ±.003°C regulation at ambient temperatures of 25° ±3°C. Testing at the selected 40°C temperature is periodically repeated using a 36-hr period and shows the actual temperature to be 39.999° ±.003°C.

Figure 12 is the schematic of the thermocouple selector unit contained in the weather-tight box (see Fig. 6). The two stepping-switches are Automatic Electric Company Type 44, with gold-plated contacts.* For switching copper sides of the thermocouples, the two rotor arms are connected "back-to-back" to minimize spurious thermal emf. Tests show that the switch thermals are of the order of ±.2uv (±.005°C) or less using this arrangement.

Calibration of the thermocouples was performed after installation and consisted of spot-checking of all levels with full calibration on the probes at the 16-m and -1-m levels. It is important to note that all thermocouple circuits are permanently wired, with no screw-down terminals or switching beyond that described in the preceding paragraph. Figure 13 shows the calibration circuit employed.

The probe under test was strapped to the platinum resistance thermometer and immersed in a stirred water-bath, the temperature of which was allowed to vary from the ice point to 40°C. Readings were

---

*On these and virtually every stepping-switch employed, one or more extra decks are present to accommodate unanticipated modification or maintenance problems.

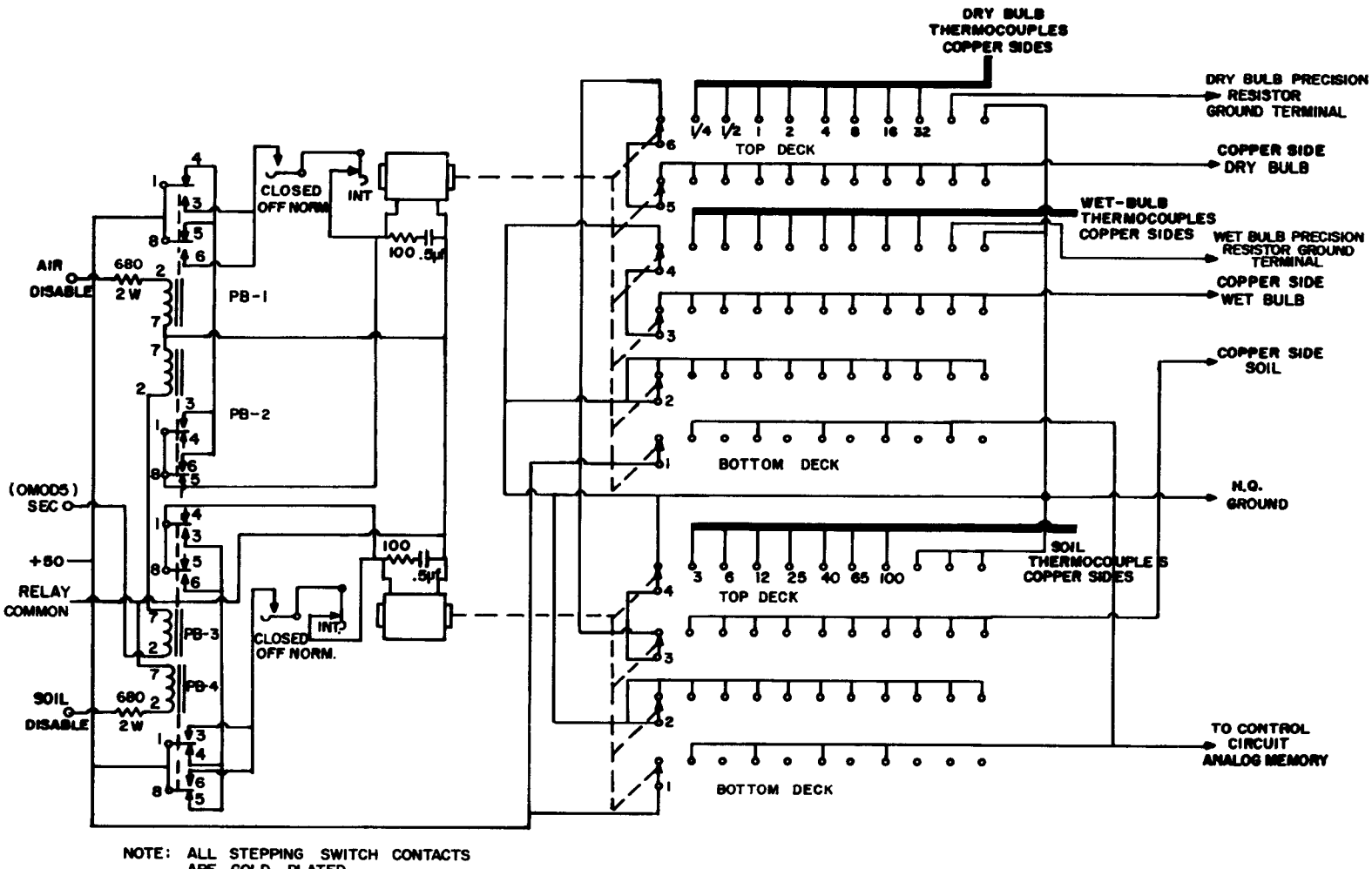

NOTE: ALL STEPPING SWITCH CONTACTS ARE GOLD PLATED.

THERMOCOUPLE SELECTORS

FIGURE 12

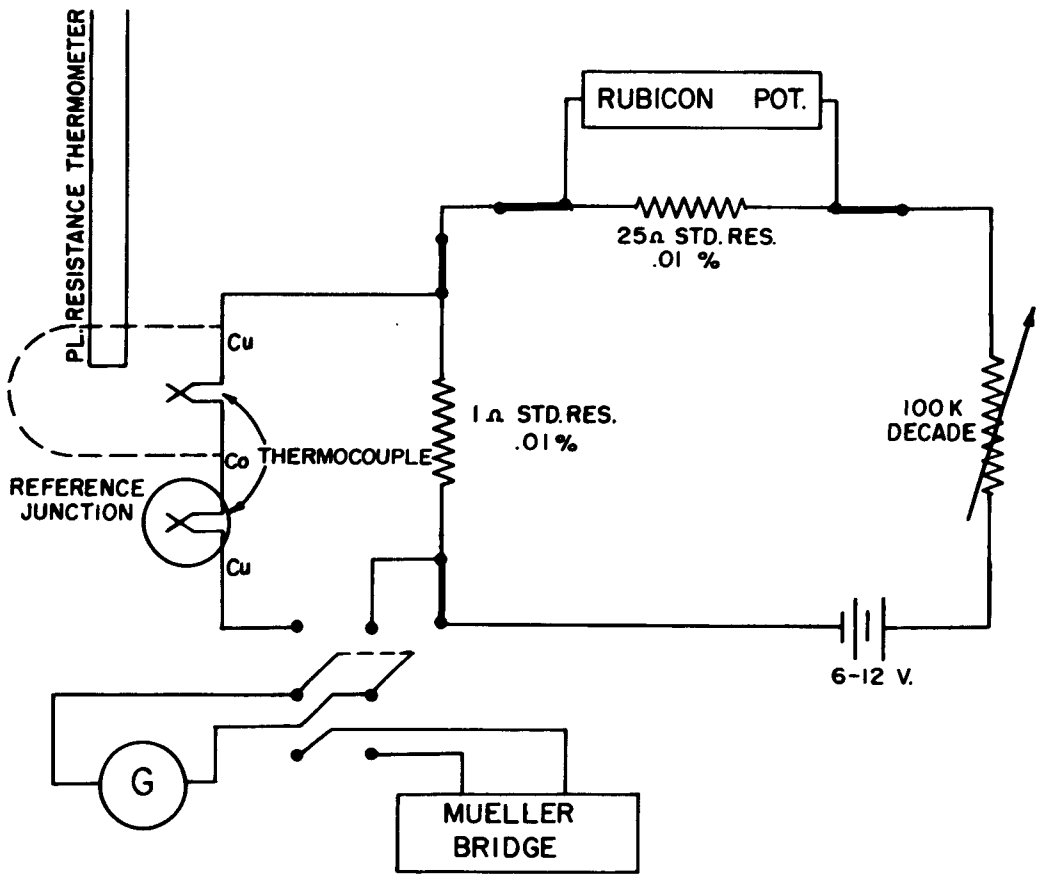

THERMOCOUPLE CALIBRATION CIRCUIT

FIGURE 13

taken at approximately 2° intervals from both directions, that is, under conditions of temperature rise and fall. The data were then fitted by least squares to the quadratic $E = a + bt + ct^2$, where E is in millivolts and t is degrees Centigrade. Calculations show a = 1.61110; b = .0385343; c = -.0000435790. The largest residual = -.0007895; the sum of the residuals = -.0000005, and the sum of the squares of the residuals = .00000955.

For an understanding of how temperature determinations are made, refer to Fig. 14. Consider for the moment only the upper-half of this drawing, which is roughly divided into two parts by the point indicating -300 v and the ground connection between the two precision 1-Ω, four-terminal resistors. The upper voltage terminal of the 1-Ω resistor is the feedback input to the thermocouple amplifier whereas the lower voltage terminal goes to the copper side of the reference junction thermocouple and position #10 of the top deck (deck 6) of the air-temperature selector stepping-switch. The signal input to the thermocouple amplifier comes directly from the #5 deck of the air-temperature selector stepping-switch or the "copper side dry bulb" as marked on the thermocouple selector schematic. For example, assume that this stepping-switch is on the 1/4-m temperature level. The signal sensed by the amplifier is the potential difference between that developed across the 1-Ω resistor and the bucked output of the reference thermocouple and the 1/4-m thermocouple.

The output of the amplifier is fed to an operational amplifier in the analog memory chassis which serves alternately as a reading device and as a memory device for storing the temperature value until selection for readout is made. Figure 14 shows that the feedback circuit to this 1-Ω resistor is completed by a three-element network of precision resistors whose values are shown. Note that one side of the top resistor is connected directly to the feedback terminal of the analog memory, as well as the input of the function generator, thus correcting for the non-linearity of the thermocouple calibration curve.

The open loop gain of the system is of sufficient magnitude that the output is dependent only on these three resistors whose common point, as noted previously, is the feedback input to the thermocouple amplifier. Hence, the voltage appearing at the output of the analog memory amplifier is numerically equivalent to the temperature in degrees Centigrade, though in actuality what is being measured is the difference in potential generated by a thermocouple at a given level on the mast and a thermocouple at 40°C within the reference junction.

Referring again to Fig. 12, it may be seen that decks 4 and 3 of the air-temperature selector switch are identical in function to decks 6 and 5, the only exception being that the former are wet-bulb connections while the latter are dry-bulb. Thus, with reference to Fig. 12 and 14 and the preceding discussion, it may be seen that simultaneous measurements of wet- and dry-bulb thermocouples at a given level are

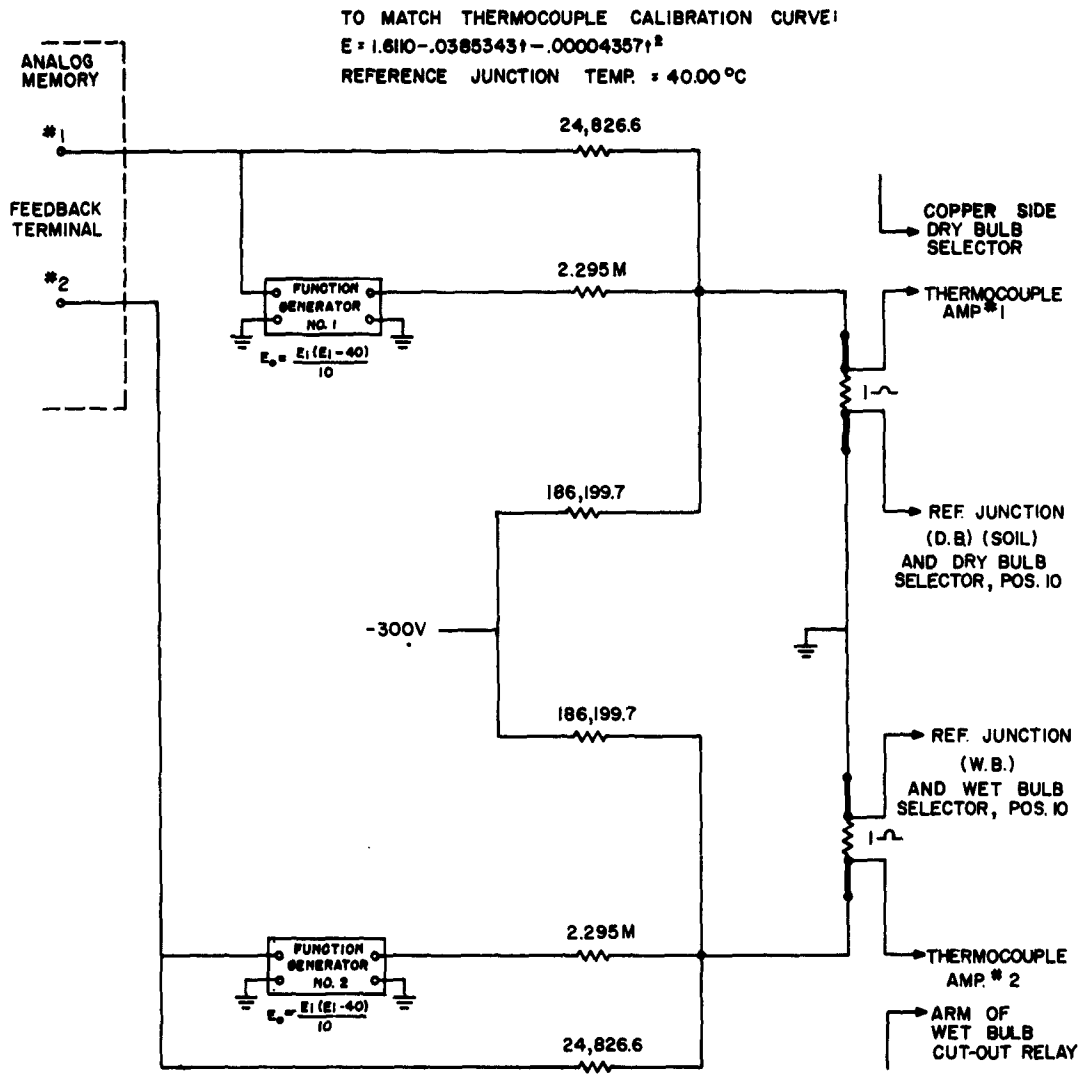

NOTE: ALL RESISTORS ARE ± 0.01% TOLERANCE WITH A TEMP. COEFFICIENT OF ± 5 PPM / °C

PRECISION RESISTOR DETAIL

FIGURE 14

made and the level is switched sequentially from 1/4 m up to 32 m.

Following selection of the 32-m thermocouples the wiper moves to the precision resistor ground terminal; hence, on this position the signal sensed by the thermocouple amplifier is the potential developed across the 1-Ω resistors only, thus yielding a voltage at the output of the analog memory, numerically equal to 40°C, which is the reference junction temperature.

Again referring to Fig. 12, it can be seen that if the air-disable relay is energized and the soil disable relay is not energized, the air-temperature selector switch is inactive and the soil-temperature selector switch is active which, in this case, gives the temperatures at 3, 6, 12, 25, 40, 65 and 100 cm in the soil through the dry-bulb channel, since the wipers of decks 4 and 3 of the soil-temperature selector stepping-switch are connected to the wipers of decks 6 and 5 of the air-temperature selector switch. Of course, in all of the preceding discussion concerning air temperatures, the soil-disable relays were assumed to be energized, thus disabling the soil-temperature stepping-switch.

Figure 15 shows the thermocouple amplifiers necessary to produce the high DC gain (approximately one million) with a minimum of zero offset. To avoid error due to possible 60-cycle pickup in the input signal, the choppers are driven at 94 cps. In order to minimize thermal errors at the input terminals, heavy copper terminals are employed. The total zero offset error is less than 0.1μv (.0025°C) as referred to the input.

The analog memory unit is shown in Fig. 16. The four amplifiers (A_1, A_2, A_3, A_4) are Philbrick Model K2W. Two of these complete the temperature feedback circuit by connection to inputs #1 and #2 and feedback outputs #1 and #2, while the other pair (alternately) feed outputs #1 and #2 to provide stored data for readout. That is, when a temperature profile is being taken, control signals from the thermocouple selector box cause relays PB1, PB2, and PB3 to oscillate with a 5-sec half-period, thereby reversing the roles of A_1, A_2, A_3 and A_4 every five seconds. Consequently, amplifiers A_1 and A_3 may be "integrating" temperatures for the 8-m level while amplifiers A_2 and A_4 are "remembering" values for the 4-m level. It is during this particular interval that the 4-m values would be digitized, typed and punched.

The switch and micro-ammeter shown in Fig. 16 permit checking of the feedback output and balance conditions on the individual operational amplifiers. The switch is normally left in feedback #1 or #2 position during normal operation, although it can be left in any position other than zero (balance). The test circuitry is such that on a balance position any deflection of less than ± 10 divisions constitutes satisfactory operating balance of the amplifiers. The 5-sec half-period noted above is a result of the temperature selector switches being controlled by 5-sec pulses and of the common wiring of alternate positions

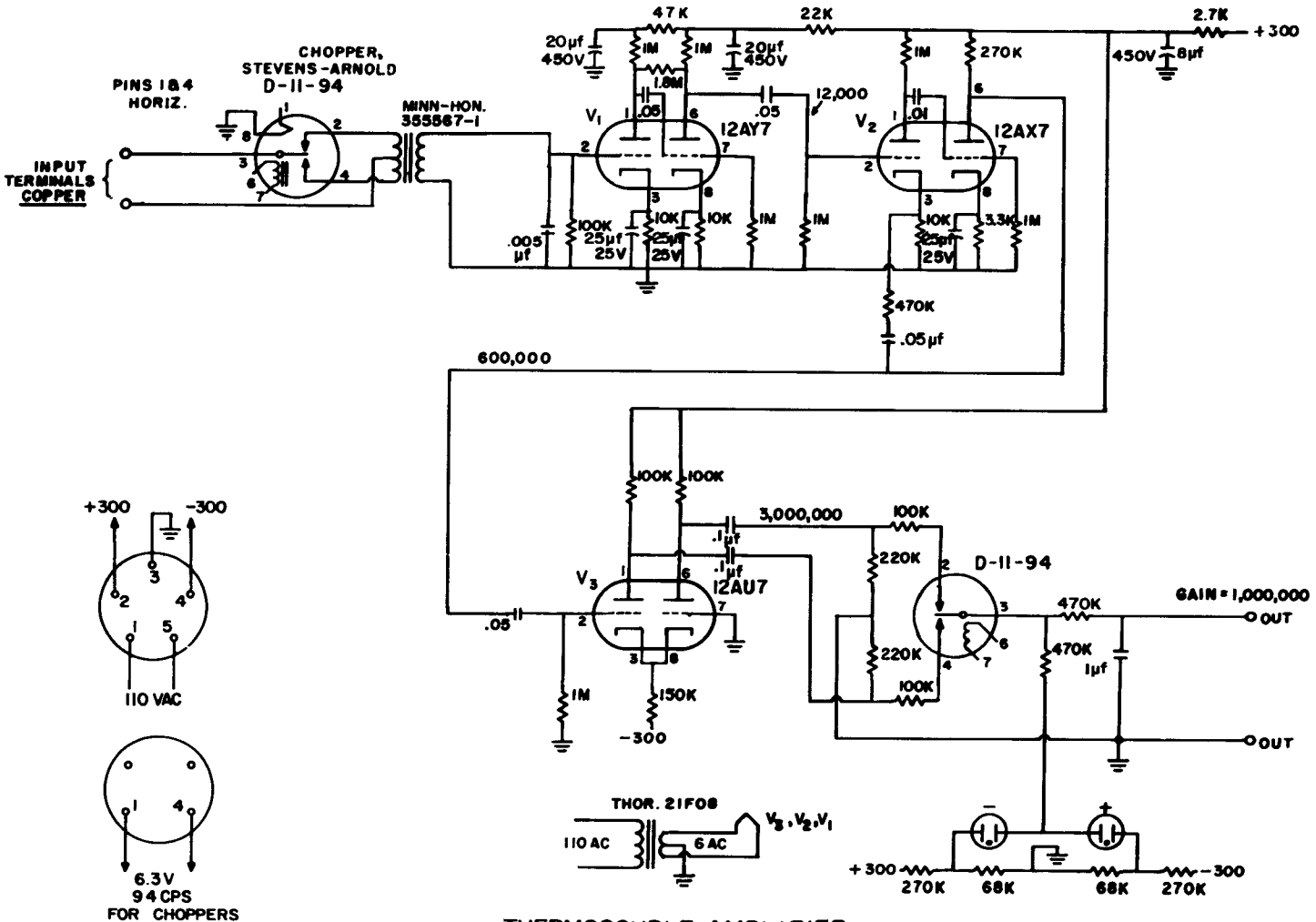

THERMOCOUPLE AMPLIFIER

FIGURE 15

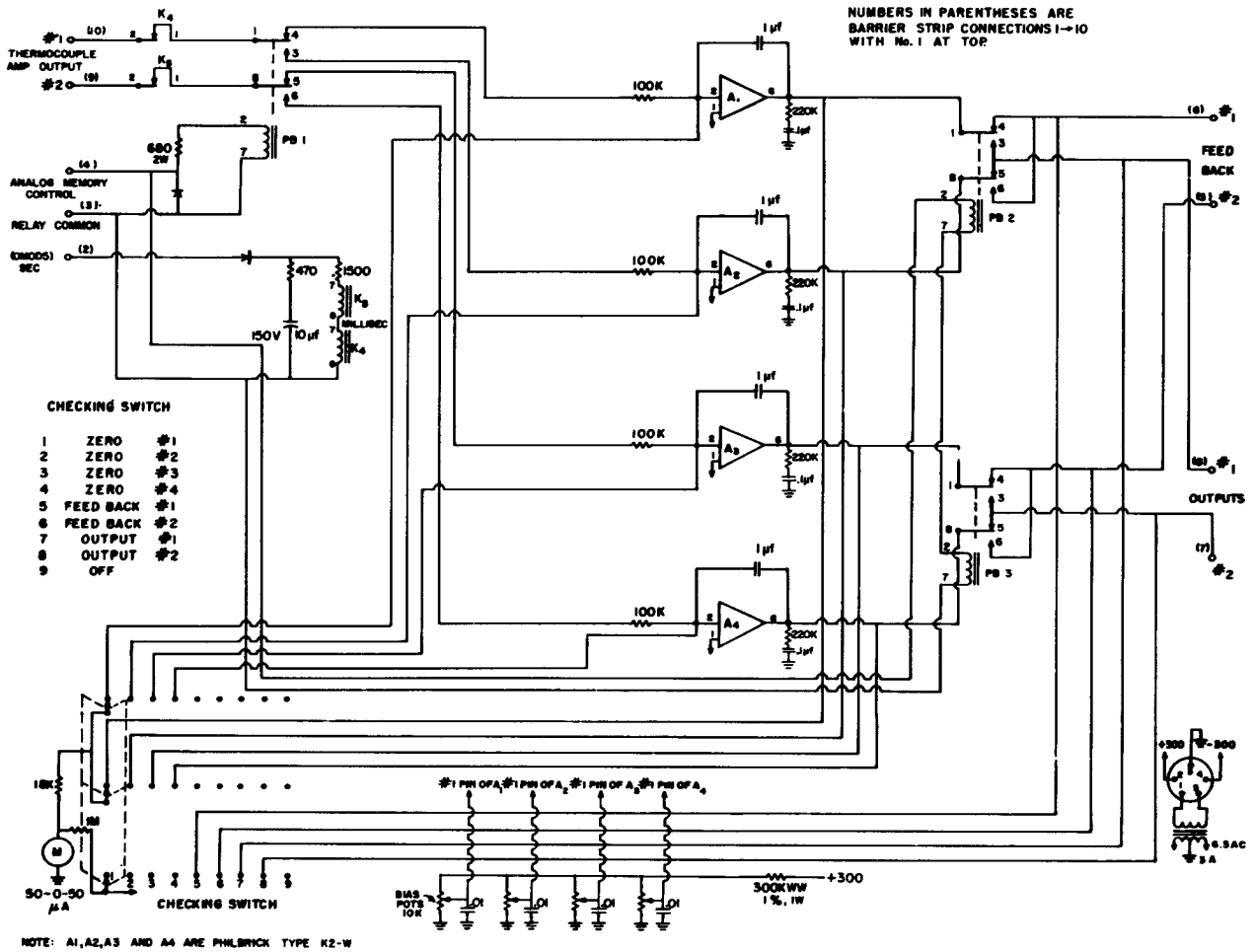

ANALOG MEMORY

FIGURE 16

on the #1 decks of the switches (see Fig. 12). The stepping-switches are cocked at the beginning of these 5-sec pulses and step at the termination thereof; consequently, the stepping-switch is on each measuring position for a total period of five seconds minus the length of the (0 MOD 5) SEC pulse, which will later be shown to be approximately 225 ms; thus by virtue of the 1-mfd feedback capacitors (polystyrene), it can be said that each temperature value constitutes a 4 3/4-sec integration, although it would be more correct to say that a 4 3/4-sec tracking of the given temperature is made, which is more than adequate to insure that the amplifier output corresponds to the DC level of the temperature being sensed.

The relays K_4 and K_5 (Stevens-Arnold Millisecond relays) are employed to prevent the transient, introduced whenever the thermocouple selector takes a step, from entering into the signal integrators. These relays are driven by the same 5-sec pulse that operates the thermocouple selectors; however, the 10-mfd capacitor in this circuit holds K_4 and K_5 down for a time sufficient to insure that the stepping transient has died out.

The memory drift due to spurious amplifier input current has been determined to be less than .005°C/sec and since values are normally read out in less than a second after storage, error from this source is negligible.

Figure 17 shows the function generator required to correct for the parabolic nature of the thermocouple calibration curve. Specifically, it is required that the output voltage be:

$$E_o = \frac{1}{10}(T - 20)^2 - 40,$$

where T is the input potential in volts or, due to the choice of scale-factor, the measured temperature in degrees Centigrade. In order to match the equation within 1% of the peak output for the input range of -10° to 50° (volts), the function is approximated by a seven-segment diode network, together with an absolute value circuit to produce a "mirror image," so that, in all, a 14-line segment approximation is obtained. The operational amplifiers used are Philbrick Type K2W. Alignment to exact specifications is accomplished by means of screw-driver adjustments to pots A, B, C, D, E, F, G, H, J and K, according to the procedure listed below.

Step 1.

Turn (E), (F), (G), (H), (J) and (K) fully counter-clockwise.

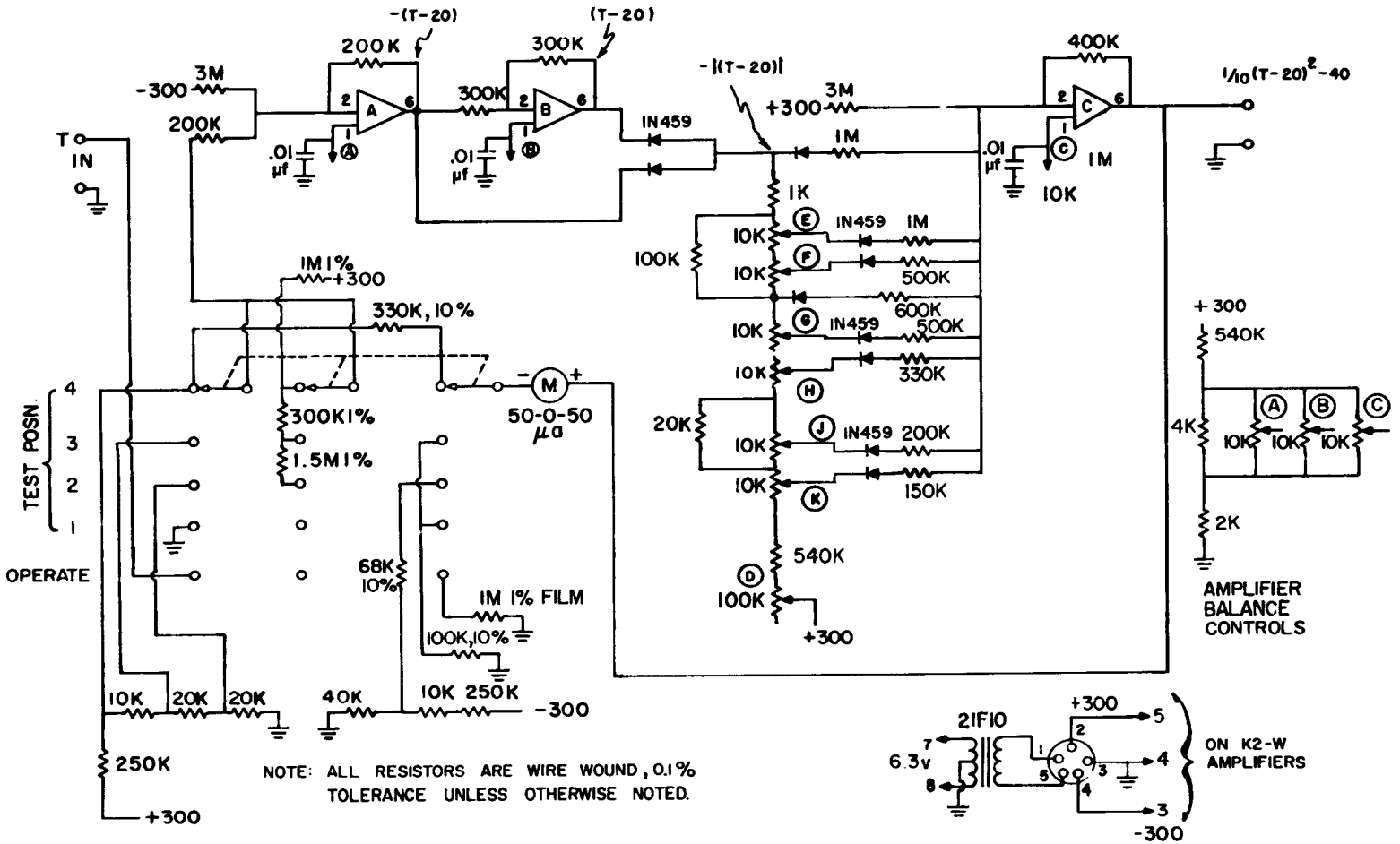

FUNCTION GENERATOR

FIGURE 17

Step 2.—Input voltage of +20.00 volts.*

(a) Adjust the bias controls (A) and (B) until the associated amplifier has an output of zero volts;

(b) Adjust (C) until an output of -40.00 volts is obtained;

(c) Adjust (D) until the junction of pots (H) and (J) reads +17.50 volts.

Step 3.—Input voltage of +25.00 volts.

Turn control (E) clockwise until an output of -37.50 volts is obtained.

Step 4.—Input voltage of +30.00 volts.

Turn control (F) clockwise until an output of -30.00 volts is obtained.

Step 5.—Input voltage of +35.00 volts.

Turn control (G) clockwise until an output of -17.50 volts is obtained.

Step 6.—Input voltage of +40.00 volts.

Turn control (H) clockwise until an output of zero volts is obtained.

Step 7.

Check with zero volts input to see if zero volts output is obtained. If an appreciable output (±15 v) exists, the function generator is not serviceable and should be replaced with a spare pending repair and calibration.

Step 8.—Input voltage of +45.00 volts.

Rotate control (J) clockwise until an output of +22.50

---

*In normal practice at stations A and B the procedure used to acquire the necessary calibration input voltages is to use a potential divider across the 300-v supply which, as can be seen in Fig. 14, is fed to the analog memory chassis. Both the input and output values are read with a 10-megohm digital voltmeter which is the analog-to-digital converter employed in the readout system.

volts is obtained.

Step 9.—Input voltage of +50.00 volts.

Rotate control (K) clockwise until an output of +50 volts is obtained.

The test switch and micro-ammeter shown in Fig. 17 allow for rapid checking in the field of four points on the function curve. The test circuitry is proportioned such that meter readings of less than ±10 divisions, as the selector switch is rotated, indicate correct alignment. The points checked are 0°, 20°, 40° and 50°C. In the OPERATE switch position, the test meter indicates the function generator output, which is 50 v maximum.

Since the amplifiers used in the function generators are not chopper-stabilized, the errors as noted on the four test-positions may be due to amplifier drift. To properly balance the amplifiers, other than as noted when calibrating the function generators, set the test switch in the #2 position and adjust the outputs of amplifiers A, B and C to 0.000, 0.000, and -40.00 v, respectively. If the test positions still indicate error in excess of ±10 divisions, the function generator must be repaired and/or realigned.

Summarizing, specific thermocouples, or thermocouple pairs for the air probes, are selected through use of stepping-switches which are pulsed at 5-sec intervals. Normally, the switches are held in the home position by having both the AIR DISABLE and the SOIL DISABLE hubs energized, and in order for one of the switches to commence stepping, the appropriate DISABLE hub must be de-energized.

One deck of each stepping switch is wired to a 50-v control circuit which provides positional information for the analog memory unit. Unused points on the signal decks are returned to signal ground to prevent the temperature integrators from "running away" when not on an actual measuring point.

From Fig. 14 it may be seen that the accuracy of the temperature system is dependent on R_1 (24.8266K), R_2 (186.1997K) and R_3 (2.295M), the 1-Ω units, and the reference voltage. Inasmuch as the latter is obtained from the system power supply (Power Designs, Inc., 1700 Shames Drive, Westbury, New York, Model D305-CS), which furnishes +300 v and -300 v, with a precision of .01% and the 1-Ω resistors are four-terminal types (Rubicon Standard Resistors) with a guaranteed accuracy of .01%, it is apparent that R_1, R_2 and R_3 are the critical components.

Neglecting for the moment the function generator, the output of which is zero for T = 0°C and for T = 40°C, R_1/R_2 must equal 40/300 in order to compensate for the reference temperature of 40°C and must be of values such that the proper output is obtained at T = 0°C.

(The resistors selected to maintain these characteristics within .02°C have a tolerance of ±.01% and a temperature coefficient of 5 ppm or less.) Thus, neglecting the function generator and the existence of R_3, the result is a system with a linear transfer function that is correct for zero degrees and for 40 degrees. Consequently, R_3 (±.05% tolerance, 20 ppm) must be such that the function generator can introduce the required amount of second-degree correction. The maximum correction is at the peak of the parabolic function (20°C) and amounts to slightly less than one-half degree.

As noted earlier a reference voltage for each channel is selected immediately following the 32-m dry- and wet-bulb temperature. This is accomplished by wiring the ground potential terminal of each channel's standard 1-Ω resistor, using thermocouple copper wire, to the thermocouple selector switch position immediately following the 32-m position. This, in effect, says that the measuring thermocouple is at exactly the same temperature as the reference thermocouple, 40.00°C.

A wet-bulb cut-out circuit, Fig. 18, is provided which replaces the wet-bulb data signal with the wet-bulb reference voltage, if desired.* Either constant or timed cut-out is available. However, the actual switching is synchronized with a pulse [(4 MOD 5) MIN] from the system timer, thus allowing wet-bulb data to be switched in or out only at prescribed times in the program sequence.

This completes the description of the temperature measuring system with the exception of the method used to control and synchronize the temperature readout, which will be discussed subsequently in the readout section, and a planned modification to the system which is noted below.

During the 18 months that stations A and B have been in operation as a part of the Dallas Tower Network there have been several occasions when it would have been desirable to track the temperature at a particular level rather than employ sequential sampling. A modification to permit this will be incorporated, following the planned changes of the thermocouple housings. This modification, utilizing relay and stepping switch control, will permit holding of the temperature selector stepping-switches in desired positions with retention of the normal control circuitry to the analog memory.

Inasmuch as this report is intended not only as a description of the measuring systems but also as a manual for maintenance, two tables follow which are included primarily for the latter function. Pin numbers and terminology employed in these tables refer of course to the figures already cited and to figures that will appear in the readout section.

---

*No wet-bulb data beyond experimental requirements have been collected to report-date on the Dallas Tower Network due to inadequacy of the system when operated remotely. This deficiency will be removed in early 1963.

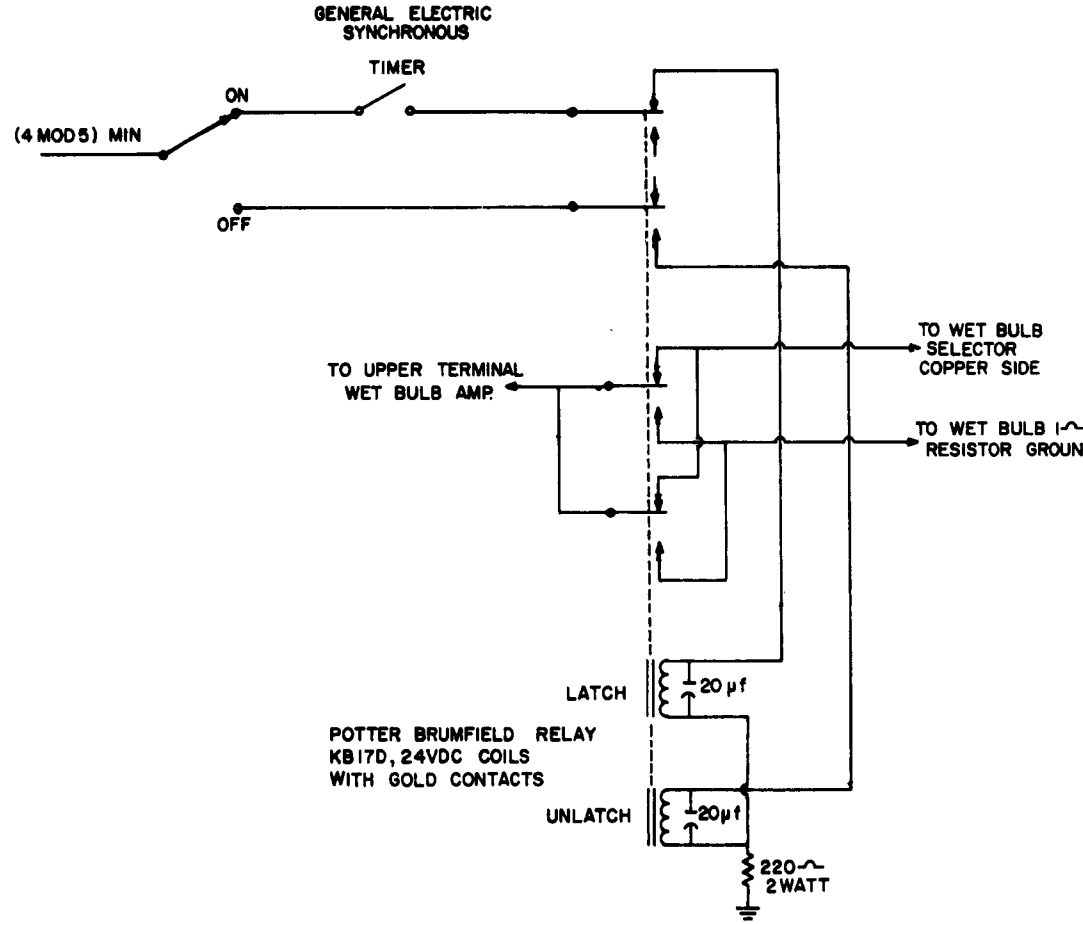

WET BULB CUT-OUT CIRCUIT

FIGURE 18

Table 1. Temperature System Cabling

Connector	Pin #	Function	Connects to
Barrier Strip on Analog Memory	1	Chassis Ground	Power Bus
	2	(0 MOD 5) SEC	Timer, Pin E
	3	Relay Common	Precision Resistor Box B.T. (Barrier Terminal) #6
	4	Analog Memory Control	Precision Resistor Box B.T. #1
	5	Wet-Bulb Feedback	Red Input Terminal of Wet-Bulb Function Generator; 24,826.6Ω Resistor of Wet-Bulb Precision Resistor Network
	6	Dry-Bulb Feedback	Red Input Terminal of Dry-Bulb Function Generator; 24,826.6Ω Resistor of Dry-Bulb Precision Resistor Network
	7	Wet-Bulb Output	Data Selector 10-Pin Plug, Pin D
	8	Dry-Bulb Output	Same Pin C
	9	Wet-Bulb Learn Input	Wet-Bulb Thermocouple Amplifier, Red Output Terminal
	10	Dry-Bulb Learn Input	Dry-Bulb Thermocouple Amplifier, Red Output Terminal
Dry-Bulb Amp. Input Terminals	Upper	Signal Input	Copper Side Dry-Bulb Selector
	Lower	Feedback Input	Signal Side of Dry-Bulb 1Ω Resistor
Dry-Bulb Amp. Output Terminals	Red	Amplifier Output	Analog Memory B.T. #10
	Black	Chassis Ground	N.C. (No Connection)
Wet-Bulb Amp. Input Terminals	Upper	Signal Input	Arm of Signal Contacts of Wet-Bulb Cut-Out Relay
	Lower	Feedback Input	Signal Side of Wet-Bulb 1Ω Resistor
Wet-Bulb Amp. Output Terminals	Red	Amplifier Output	Analog Memory B.T. #9
	Black	Chassis Ground	N.C.
Dry-Bulb Func. Gen. Input Term.	Red	Dry-Bulb Feedback	Analog Memory B.T. #6
	Black	Chassis Ground	N.C.
Dry-Bulb Func. Gen. Output Term.	Red	Function Generator Output	2.295M Resistor of Dry-Bulb Precision Resistor Network
	Black	Chassis Ground	Shield of Wires from Function Generators to Precision Resistor Networks
Wet-Bulb Func. Gen. Input Term.	Red	Wet-Bulb Feedback	Analog Memory B.T. #5
	Black	Chassis Ground	N.C.
Wet-Bulb Func. Gen. Output Term.	Red	Function Generator Output	2.295M Resistor of Wet-Bulb Precision Resistor Network
	Black	Chassis Ground	N.C.

Table 2. Thermocouple Selectors Cabling

Connector	Pin #	Function	Connects to
	1	Analog Memory Control	Analog Memory B.T. #4; Selector Box
	2	(0 MOD 5) SEC	Timer Pin E; Selector Box
	3	Soil Disable	Main Programmer Pin c; Selector Box
	4	Air Disable	Main Programmer Pin D; Selector Box
Barrier Strip in Precision Resistor Box	5	+50v	Selector Box; Power Bus
	6	Relay Common	Selector Box; Wet-Bulb Cut-Out Relay; Power Bus; Analog Memory B.T. #3
	7	----	N.C.
	8	-300v	186,199.7Ω Resistor of Dry-Bulb and Wet-Bulb Precision Resistor Networks; Power Bus
	9	Shield Ground	Power Bus
	10	High Quality Ground	Selector Box; Power Bus

c. Wind Direction Measurements

The wind direction sensor employed is the standard Beckman-Whitley wind vane with a 250-Ω continuous rotation potentiometer which has a dead zone of 5° and an electrical angle of 355°. Circuitry used to transmit the signal from the wind-direction potentiometer is shown in Fig. 19. Two chopper-stabilized operational amplifiers (Electro Precision Corporation DLA-41-P1) are employed in this circuit. Referring to Fig. 19, it may be seen that the first of these (1), which is used to provide the source of voltage for the wind direction pot, has been modified; the second (2), used to amplify the signal to a desired scale-factor of .1 v per degree, is unmodified. The OFFSET potentiometer in the input circuit is employed to place the 5° dead sector of the pot in any direction and for the current program is adjusted such that the dead sector is to the west inasmuch as the frequency of occurrence of west winds is low. Thus, the output of the wind direction chassis varies from -8.50 v (-85°) to 27 v (270°) which, as noted above, corresponds to a scale-factor of .1 v per degree.

Referring to Fig. 19, it may be seen that a three-position switch marked OPERATE, SPAN and OFFSET is provided so that the input to amplifier 2 (normally from the OPERATE position) can be moved to the OFFSET and SPAN positions for proper adjustment of the OFFSET and SPAN potentiometers. Normal alignment procedure is as follows: The

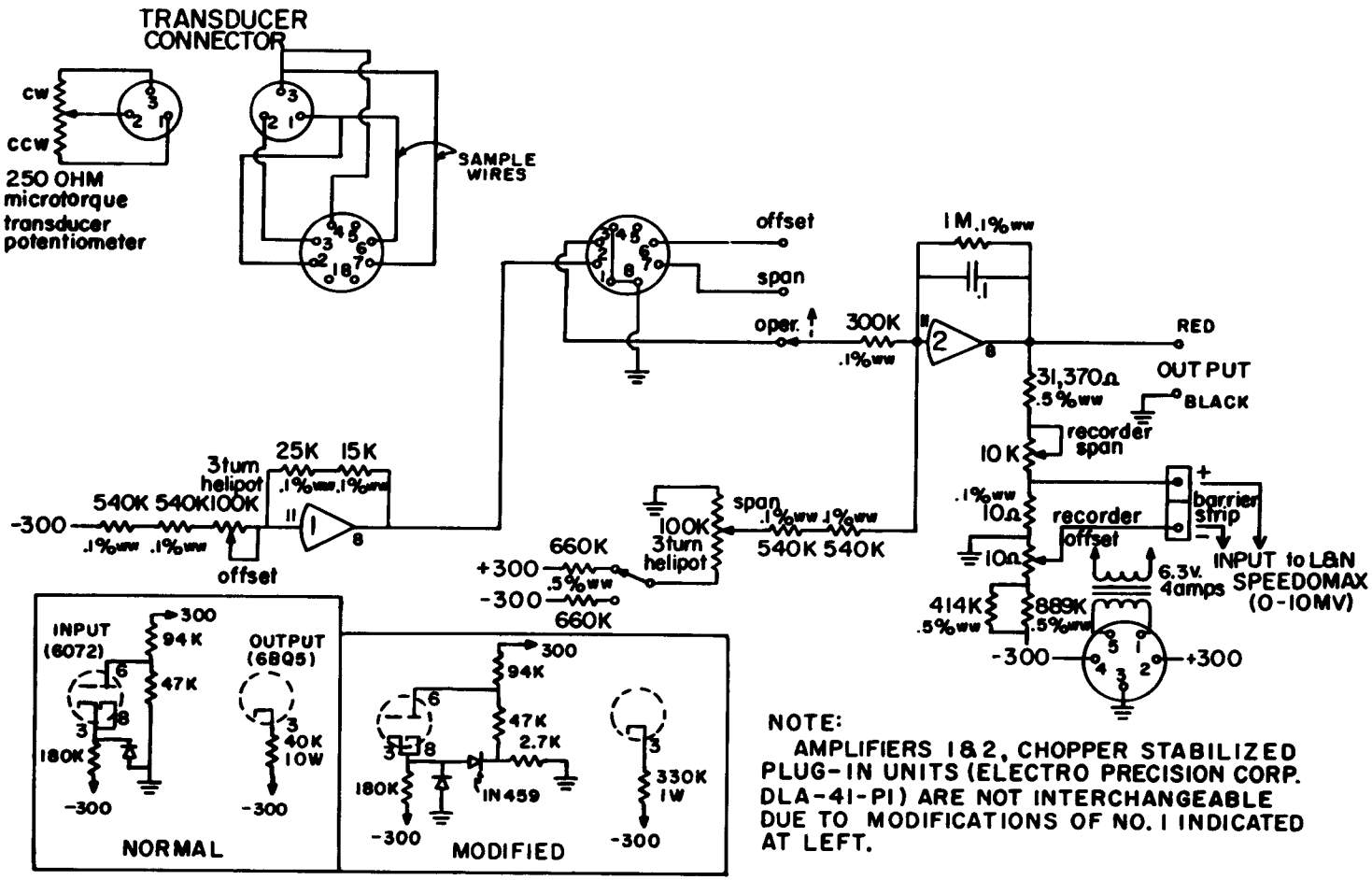

NOTE:
AMPLIFIERS 1 & 2, CHOPPER STABILIZED PLUG-IN UNITS (ELECTRO PRECISION CORP. DLA-41-PI) ARE NOT INTERCHANGEABLE DUE TO MODIFICATIONS OF NO. 1 INDICATED AT LEFT.

WIND DIRECTION CONTROL
FIGURE 19

switch is moved to the SPAN position and the SPAN pot adjusted such that the output of the amplifier as read on the system DVM is 27.00 v. The switch is then moved to the OFFSET position and the OFFSET pot adjusted such that the DVM reads -8.50 v. If the SPAN is adjusted first, minimal interaction is present between the two positions. With the exception of a recheck of the SPAN and OFFSET for interactive effects, calibration is complete and the wind-direction measurement system is ready for operation.

A second output with independent OFFSET and SPAN controls is provided for a zero-to-ten millivolt Speedomax recorder. The chart employed with this recorder is divided into 120 equal parts thus making each division represent 3°. Calibration procedure of the recorder output is identical to that listed above and is normally performed after calibration of the main output although it may be done simultaneously. Of course, the 27-v corresponds to full-scale deflection across the recorder-chart and the OFFSET of -8.50 v corresponds to two chart divisions from zero. (It is not practical nor within the capabilities of resolution of the system to set the OFFSET at 1 2/3 divisions which would correspond to 5°.) Note that in the calibrate positions the voltages measured are at the transducer which insures that resistance of the long supply-leads will not contribute to system error.

The vane is located on the tower at an elevation of 6 m and on the side opposite to the anemometer arms and at the same distance, 5 ft, from the tower proper. The wind vane is oriented through use of a dummy vane incorporating a four-power gun scope in the following manner.

At each station the true heading of a permanent object some two or three miles away is determined. (At Station A this is a radio tower located at 165° at a distance of approximately three miles from the vane; at all the other stations the WFAA-KRLD TV tower is utilized for sighting.) The wind-vane transducer with the gun scope is rotated until the output on the DVM corresponds to the heading of the object to be sighted and is then taped into position. The transducer is then mounted loosely on the wind-vane arm and the whole assembly rotated until the sighting object is centered in the scope. The transducer proper is then clamped into position on the arm and the tape removed.

Secondary sighting points are also provided at each station for a check to insure that the potentiometer has not lost resolution or linearity.

As will be shown later, the wind-vane signal is read to the nearest .1°; this is because a four-digit readout is employed for all parameters and is not an indication of the accuracy of the wind-vane system, which is no better than the inherent errors in the wind-vane potentiometer, the amplifiers and the sighting procedure (approximately 3° or 4°).

Table 3. Wind Direction Control Cabling

Connector	Pin #	Function	Connects to
Amphenol #78-PF8 Octal Socket	1	Ground	N.C.
	2	Transducer Source Voltage	Pin 1 of Wind Direction Transducer
	3	Transducer Signal Voltage	Pin 2 of Wind Direction Transducer
	4	Ground	Pin 3 of Wind Direction Transducer
	5	----	N.C.
	6	Offset Sample Wire	Pin 1 of Wind Direction Transducer
	7	Span Sample Wire	Pin 3 of Wind Direction Transducer
	8	Ground	N.C.
Output Binding Posts	Red	Wind Direction Output for System	Data Selector, Pin I
	Black	Ground	Shield
Barrier Strip	+	Recorder Input	Positive Terminal of L&N Recorder
	-	Recorder Input	Negative Terminal of L&N Recorder

d. Wind Speed Measurements

Wind speed data are collected at the same eight levels employed for air temperatures through use of Beckman-Whitley photoelectric anemometers (B-W Model 170-34) with single-hole choppers which, through suitable electronic amplification and conversion, drive electromechanical counters (Neuron, Type 7005D90AS—Data Instruments Division, Telecomputing Corporation, 12838 Saticoy Street, North Hollywood, California) whose readout is a 4-min integration of wind speed in cm/sec. Extraction of digital information from these counters as well as starting, stopping and resetting is controlled by the main programmer which will be discussed subsequently under readout.

Figure 20 shows the eight-channel pulse amplifier driven by the Beckman-Whitley anemometers. All eight of the channels are located on a single chassis. The output tube (25L6) supplies 90-v pulses to operate the electro-mechanical counters following conversion. As can be seen from Fig. 21, the output pulse activates a Western Electric mercury relay and is then fed or is not fed to the counter depending on the position of the conversion stepping-switch.

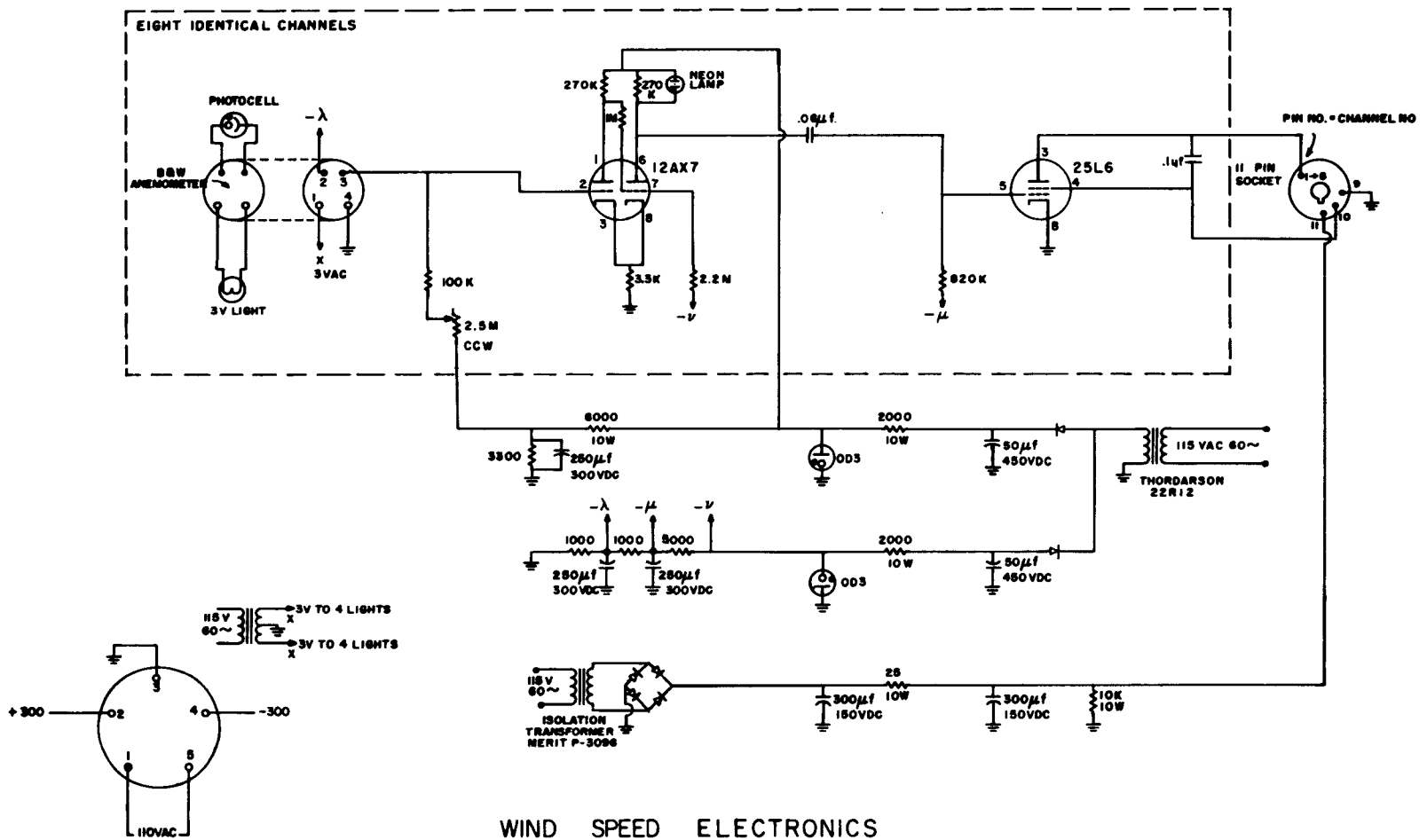

WIND SPEED ELECTRONICS

FIGURE 20

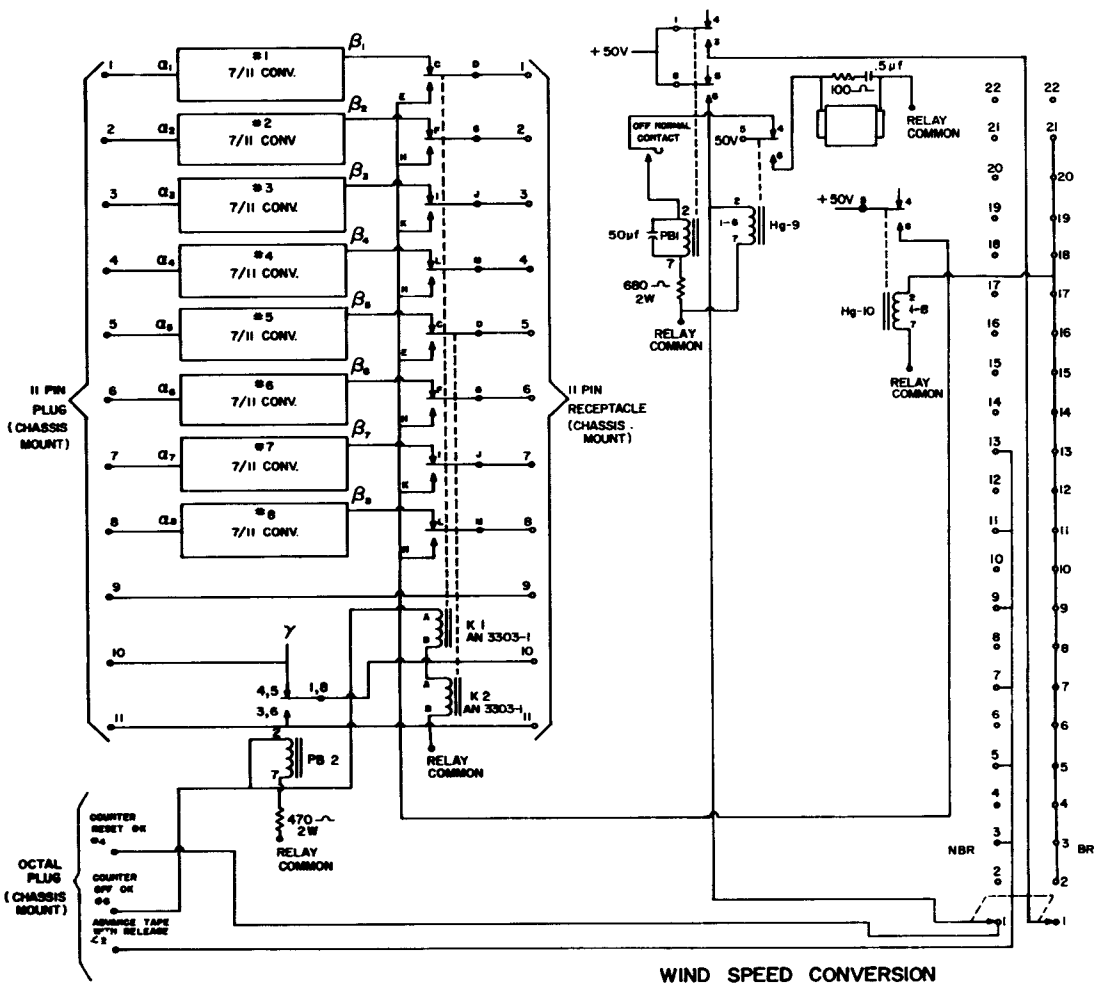

WIND SPEED CONVERSION

FIGURE 21

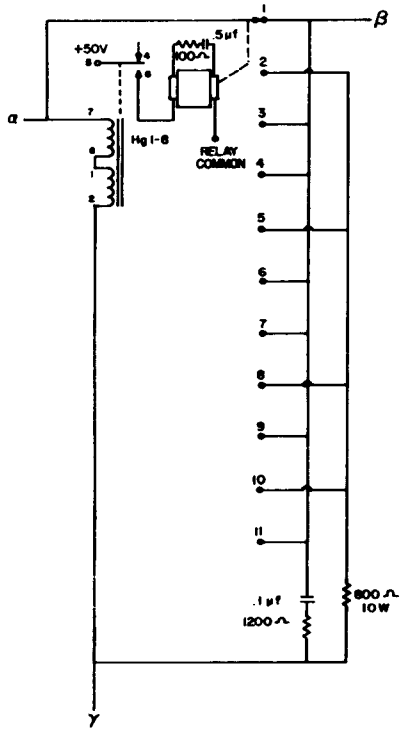

7/11 CONVERTER

The mean wind speed for four minutes in cm/sec is equivalent to 7/11 of the pulses received from the anemometer plus 20, the latter figure being the threshold velocity of the anemometers. Consequently, each converter channel is nothing more than an 11-position stepping-switch with only seven positions as direct lines to the counter. The counters, of course, are reset after readout to 20 rather than to zero.

Referring again to Fig. 21, relays K_1, K_2 and PB2, when energized, stop the train of pulses to the counters and also the 7/11 converters, the latter being true because pin 10 in this drawing is common to all counters and by the action of PB2 being energized, the B+ voltage normally on pin 11 is then applied to all counters through pin 10 and the 7/11 converters are de-activated.

The addition of 20 counts to the counters following reset is accomplished as follows: Following readout of the counters (K_1, K_2 and PB2 are energized), a 50-v control pulse enters on pin 4 and thus to the wiper of the non-bridging level of the 22-position stepping-switch since this stepping-switch has been in the home position during the normal counter operation period. This pulse energizes HG9, thus applying 50 v to clock the 22-position stepping-switch which steps to position #2 at the termination of this pulse. In so stepping the OFF NORMAL contacts are closed and since HG9 is no longer energized, PB1 is energized, putting 50 v onto the wiper of the bridging level of the 22-position stepping-switch. This in turn activates mercury relay HG10, putting 50 v to one side of each of the counters (the other side to the B+, approximately 150 v) thus tripping each counter once. At the same time PB1 is energized, HG9 is re-energized, which results in the stepping-switch moving to position #3 which again energizes HG10, which sends the second count to the counters, and so on until position #21 is reached. At this point a count is not sent to the counters but the stepping-switch is returned to the home position because the OFF NORMAL contacts on the stepping-switch are made. (Note that the non-bridging level of the 22-position stepping-switch has positions 3, 5, 7, 9, 11 and 13 shorted. This permits, as will be discussed later under readout, the transmittal of six release punches to the tape punch, thus allowing easy subdivision of the tape into separate sections.)

The facilities for anemometer-calibration as such are not available on the program and anemometer comparison is made instead, utilizing so-called "standard" anemometers which are kept in sealed storage except when being used for comparison. (Twenty anemometers were originally ordered and prior to shipment were recalibrated by Beckman-Whitley against two of their standards. From the 20 anemometers, the four most nearly matching the standards were selected as comparison anemometers, the remaining 16 being put into service at the eight wind-speed levels at stations A and B.)

The standard anemometer and the one under test are mounted on a horizontal bar and connected to two counting circuits which

can be turned on and off simultaneously.* The anemometers are then allowed to count for a period of five to ten minutes, depending on the wind, and their counts are noted. The anemometers are then interchanged, thus interchanging their positions, connecting cables and counters, and permitted to run for another five to ten minutes. The average of the right and left readings is then compared with the average of the right and left readings for the standard, and if a difference not exceeding 3% is found, the anemometer is assumed to be within calibration and is returned to service. Initially, of course, the standard being utilized for checking is compared against the other three standards to insure that a difference in excess of 1% between standards does not exist.

Of course, following calibration, the anemometers are always returned to the same level at which they were originally employed and with the same set of cups.

This completes the discussion of the wind-speed measurements. As in the case of the discussion of temperature measurements, two tables showing cable inter-connections follow; these tables are not particularly pertinent to the discussion of the wind-speed measurements and are used primarily for maintenance purposes.

e. Insolation, Albedo, Net Radiation and Soil Heat Flux Measurements

These four parameters are grouped together in the discussion inasmuch as they all use the same type of instrument amplifier, shown in Fig. 22. However, the instrument amplifiers in use at Station A have different feedback values from those used at Station B due to the wide range of calibration factors that exist for the sensors employed: Eppley pyrheliometers (10-junction), Beckman-Whitley net exchange radiometers and Beckman-Whitley soil heat plates (B-W Model ST200-1). The outputs of these various sensors are fed directly to the instrument amplifiers which raise the low potential inputs to a common scale-factor of 1000 v/cal/cm^2/sec. The feedback at DC is extremely large and the gain of the amplifiers is essentially entirely dependent on the precision resistors.

Referring to Fig. 22, it can be seen that the selector switch permits choice between one of two ranges (one of two manganin feedback resistors) according to whether the amplifier is employed with

---

*As will become evident later, the regular system channels could be used for this comparison test. This is not done, however, and a separate, portable, two-channel system is employed (three-channel after January 1963) which allows comparison of outlying-station anemometers which have 100-hole chopper transducers. Schematics for all calibration and test circuitry will be found in the section on outlying stations.

Table 4a. Wind Speed Electronics Cabling

Connector	Pin #	Function	Connects to
Amphenol #86-PM11 Plug	1	1/4-m Wind Speed Pulse	Wind Speed Conversion 11-Pin Plug, Pin 1
	2	1/2-m Same	Same Pin 2
	3	1-m Same	Same Pin 3
	4	2-m Same	Same Pin 4
	5	4-m Same	Same Pin 5
	6	8-m Same	Same Pin 6
	7	16-m Same	Same Pin 7
	8	32-m Same	Same Pin 8
	9	Wind Speed Electronics Power Ground	Same Pin 9
	10	Switched B+ Power for 25L6 Screens	Same Pin 10
	11	Wind Speed Electronics B+ Supply	Same Pin 11
1/4-m Amphenol #78-PF4 Socket	1	3 VAC	1/4-m Anemometer Plug, Pin 1
	2	Photocell B-	Same Pin 2
	3	Amplifier Input Grid	Same Pin 3
	4	3 VAC	Same Pin 4
1/2-m Amphenol #78-PF4 Socket	1	3 VAC	1/2-m Anemometer Plug, Pin 1
	2	Photocell B-	Same Pin 2
	3	Amplifier Input Grid	Same Pin 3
	4	3 VAC	Same Pin 4
1-m Amphenol #78-PF4 Socket	1	3 VAC	1-m Anemometer Plug, Pin 1
	2	Photocell B-	Same Pin 2
	3	Amplifier Input Grid	Same Pin 3
	4	3 VAC	Same Pin 4
2-m Amphenol #78-PF4 Socket	1	3 VAC	2-m Anemometer Plug, Pin 1
	2	Photocell B-	Same Pin 2
	3	Amplifier Input Grid	Same Pin 3
	4	3 VAC	Same Pin 4
4-m Amphenol #78-PF4 Socket	1	3 VAC	4-m Anemometer Plug, Pin 1
	2	Photocell B-	Same Pin 2
	3	Amplifier Input Grid	Same Pin 3
	4	3 VAC	Same Pin 4
8-m Amphenol #78-PF4 Socket	1	3 VAC	8-m Anemometer Plug, Pin 1
	2	Photocell B-	Same Pin 2
	3	Amplifier Input Grid	Same Pin 3
	4	3 VAC	Same Pin 4
16-m Amphenol #78-PF4 Socket	1	3 VAC	16-m Anemometer Plug, Pin 1
	2	Photocell B-	Same Pin 2
	3	Amplifier Input Grid	Same Pin 3
	4	3 VAC	Same Pin 4
32-m Amphenol #78-PF4 Socket	1	3 VAC	32-m Anemometer Plug, Pin 1
	2	Photocell B-	Same Pin 2
	3	Amplifier Input Grid	Same Pin 3
	4	3 VAC	Same Pin 4

Table 4b. Wind Speed Conversion Cabling

Connector	Pin #	Function	Connects to
Amphenol #86-PM11 Plug	1	1/4-m Wind Speed Pulse	Wind Speed Electronics 11-Pin, Pin 1
	2	1/2-m Same	Same Pin 2
	3	1-m Same	Same Pin 3
	4	2-m Same	Same Pin 4
	5	4-m Same	Same Pin 5
	6	8-m Same	Same Pin 6
	7	16-m Same	Same Pin 7
	8	32-m Same	Same Pin 8
	9	Wind Speed Electronics Power Ground	Same Pin 9
	10	Switched B+ Power for 25L6 Screens	Same Pin 10
	11	Wind Speed Electronics B+ Supply	Same Pin 11
Amphenol #78-PF11 Socket	1	1/4-m Counter Pulse	Wind Speed Control Unit 11-Pin, Pin 1
	2	1/2-m Same	Same Pin 2
	3	1-m Same	Same Pin 3
	4	2-m Same	Same Pin 4
	5	4-m Same	Same Pin 5
	6	8-m Same	Same Pin 6
	7	16-m Same	Same Pin 7
	8	32-m Same	Same Pin 8
	9	Wind Speed Electronics Power Ground	Same Pin 9
	10	Switched B+ Power for 25L6 Screens	Same Pin 10
	11	Wind Speed Electronics B+ Supply	Same Pin 11
Amphenol #86-PM8 Plug	1	----	N.C.
	2	Punch Release	Typewriter Punch Junction 10-Pin, Pin I
	3	----	N.C.
	4	Counter Reset O.K.	Wind Speed Control Unit Octal, Pin 4
	5	----	N.C.
	6	Counter Off O.K.	Wind Speed Control Unit Octal, Pin 6
	7	----	N.C.
	8	----	N.C.

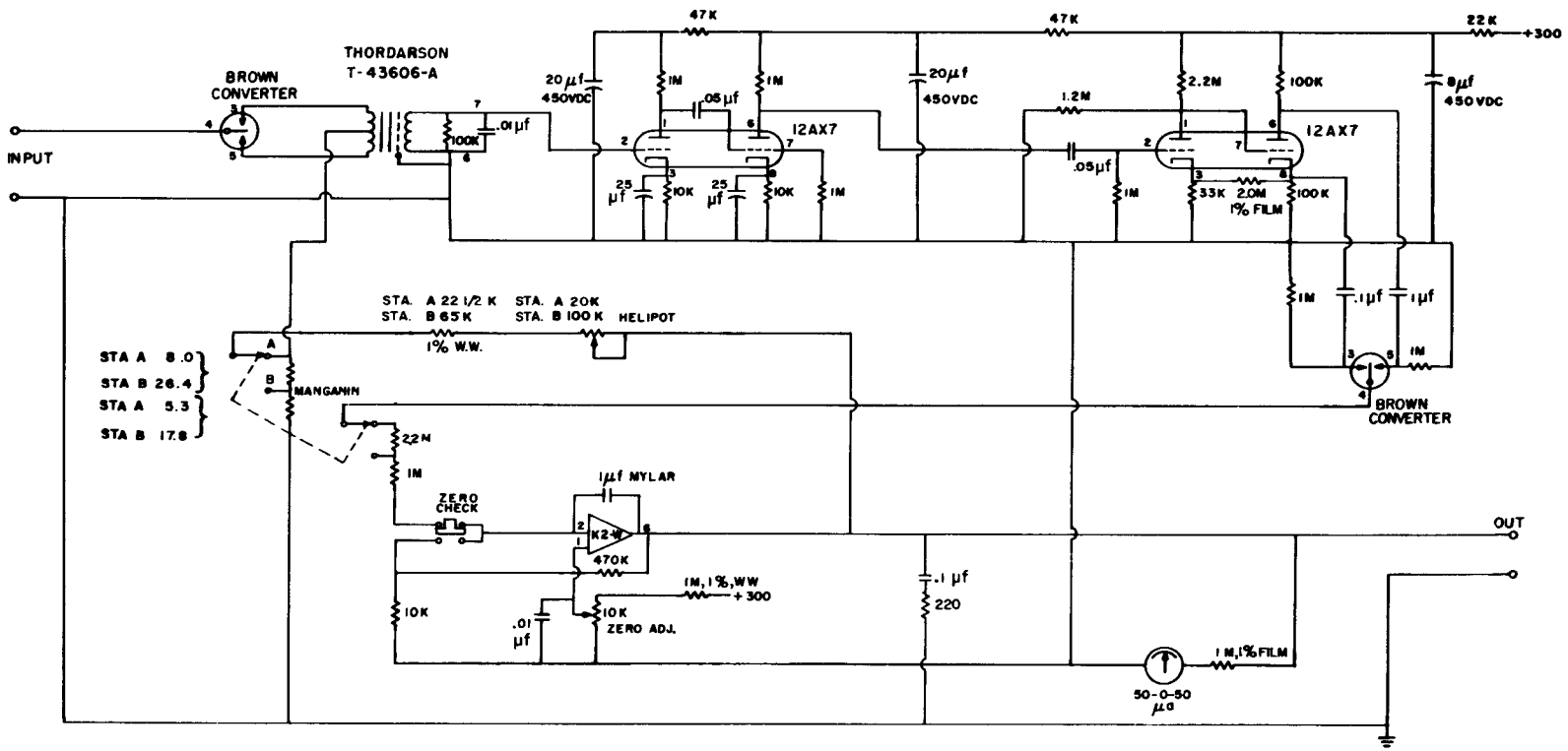

INSTRUMENT AMPLIFIER

FIGURE 22

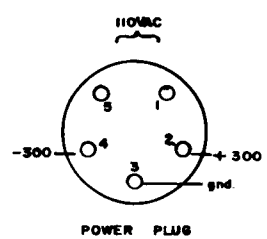

a pyrheliometer, a net radiometer or soil heat plate. The 10-turn Helipot fitted with a 1000-division dial allows gain adjustment to match individual calibration factors of the instruments and each amplifier bears a calibration card on the front of the panel, listing the proper Helipot setting for various transducers, and the gain formula for each range. One amplifier is used, of course, with each transducer, and one spare is available, making a total of five instrument amplifiers per station.

Figure 23 shows the circuit used to determine the gain equation for each range of each amplifier. These equations (of the form $G = \alpha + \beta R$ where G is the gain; R is the setting of the Helipot; α is the gain at $R = 0$, and β is the rate of change of G with R) are obtained as follows:

(1) Linearity check: with the range selector set to A, and R = 0, 0, ±5, ±10, ±15, ±25, ±30 and ±35 mv inputs are fed to the amplifier and the corresponding output read with a DVM; with the selector set at A and R = 1000, inputs of 0, ±2, ±4, ±6, ±8, and ±10 mv are supplied and the corresponding outputs noted; the preceding is repeated with the selector set on B and with R successively set at zero and 1000, with inputs of 0, ±1, ±2, ±3, ±4, ±5 and ±6 mv.

From these measurements linearity, which must be better than ±1% and is typically ±.3%, may be determined;

(2) Offset and noise check: to determine zero offset and AC noise level within the amplifier, short the input terminals and note the output reading on each range with the DVM for the DC output and an oscilloscope for the AC output (zero offsets are typically less than 5 mv and noise level typically less than 2 mv (peak-to-peak);

(3) α determination: in order to determine α, set R to zero and with the selector first on A and then on B, and with inputs of ±2, ±3, ±5, ±8 and ±10 mv, the mean values of the corresponding outputs over the inputs constitute α for each range;

(4) β determination: with the range selector set on A, and R successively set at 100, 200, 300, 400, 500, 600, 700, 800, 900 and 1000, and with a ±10-mv input for each R setting, note the corresponding outputs, and the mean reading of R and G (with α known) yields the β value for the A range; with the selector on B and R set at 100, then 200 (±9-mv input), R set at 300 and 400 (±8 mv), R set at 500 (±7 mv), R set at 600 and 700 and then 800 (±6 mv), and finally with R set at 900 and 1000 (±5 mv),

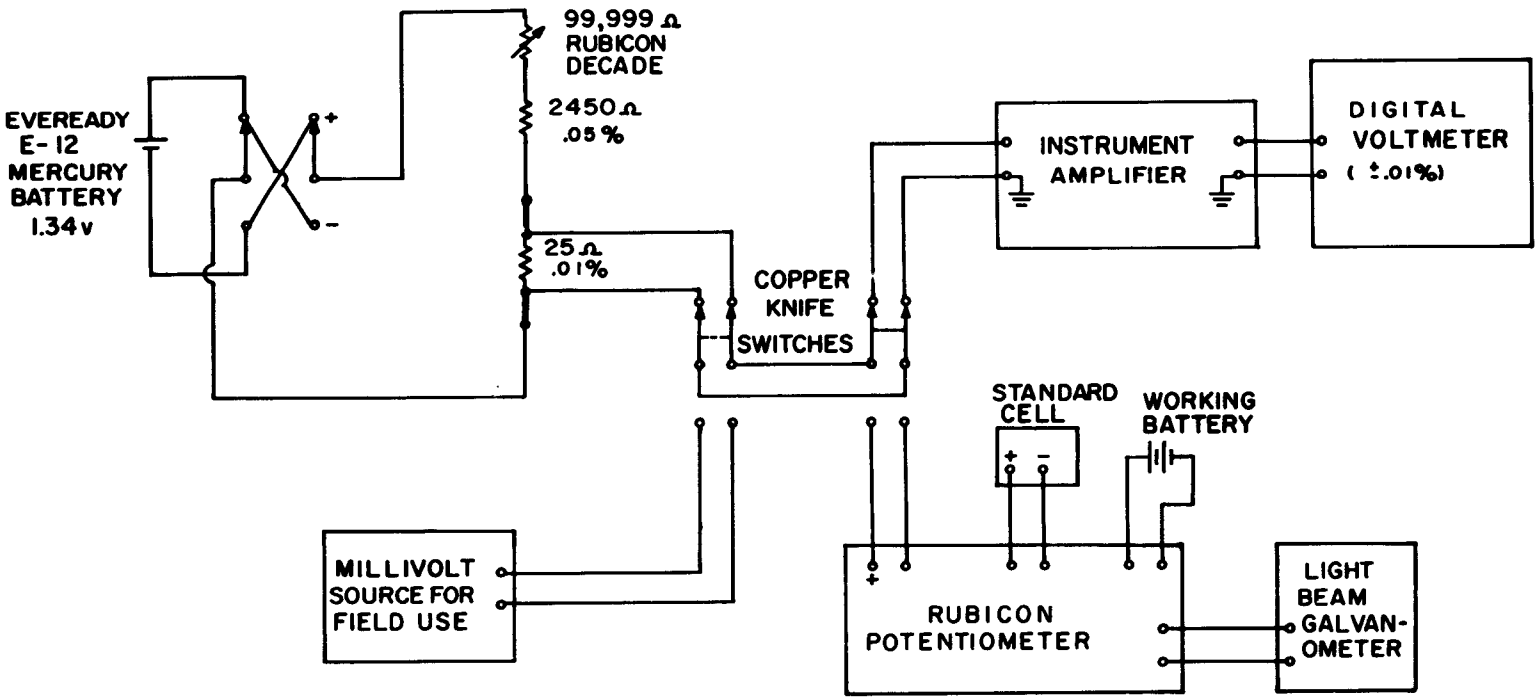

INSTRUMENT AMPLIFIER CALIBRATION CIRCUIT

FIGURE 23

note the corresponding outputs; as in the case of the A-range, the mean R and the mean G yield the β value for the B range.

Following the calibration of each amplifier, the gain equations for each range are checked by comparison of calculated versus measured gain values for inputs of $\pm$1.5 mv, $\pm$3.5 mv, $\pm$5.5 mv, $\pm$7.5 mv and $\pm$9.5 mv.

Amplifier calibration is checked in the field through use of the millivolt source (shown in Fig. 23), which is calibrated in the same fashion as the amplifiers. The input potentials normally used for field checking are 1, 5 and 10 mv.

Soil heat plates are mounted directly beside the 10-cm soil thermocouples and are read once every four minutes. Calibration as such is not possible with the facilities available to the project, but the plates are checked by mounting them side-by-side within the soil and determining whether they will meaningfully track each other over a full 24-hr period. It has been found that the Beckman-Whitley Model T200-1 soil heat plates (which are nothing more than the plates used with the Beckman-Whitley net radiometers) will not track due to lack of moisture-proofing which allows electrical leakage. Thus, this plate model, formerly used for soil heat flux measurements, is no longer employed.

Before these sensors were discarded, however, several experiments, which included various types of water-proofing, mounting orientation and depth of mounting, were performed. These tests conclusively showed that the two sensors tested would not track each other at any signal level, nor would either one measure soil heat flux as determinable by time variations in the soil temperature profile.* The Beckman-Whitley corporation when advised of the results of these tests agreed through Mr. Fred Stang of that company to furnish smaller soil heat plates, encased in stainless steel, to the project for test purposes. This testing has revealed that the new plates will track and at this time further testing is under way, utilizing five of these sensors mounted in a vertical line between 10 cm and 1 m, for comparison with soil heat flux values as determined by temperature profiles.

Net radiation measurements, as noted earlier, are made with the Beckman-Whitley net exchange radiometer (Model N188-01). This sensor, along with the insolation and albedo Eppley, is mounted at an

---

*Comparison of the output of two of these soil heat flux plates with soil heat flux as determined by soil profile determinations, covering over 300 cases, is reviewed in a technical report now in preparation under joint sponsorship of GRD Contract AF 19(604)-5527 and Signal Corps Contract DA 36-039 SC-84942.

f. Readout System

As previously noted, the recording system is not dependent on the measurements being made and can be considered as a digital recorder with eight input channels that sequentially scans and displays 104 four-digit parameter values every five minutes. Two readout forms are utilized: typewriter (IBM output-writer) and punched paper tape (Friden Motorized Tape-Punch Model SP-2—Friden Inc., Rochester 2, New York). The typewriter and tape punch operate simultaneously and either or both may be removed from the system without affecting the system itself. A light bank on the digital voltmeter (Non-Linear Systems Model M-24—Non-Linear Systems, Inc., Dallas, Texas) is an additional display of all parameters except wind speed. It too may be removed by turning off the DVM but if so, only error signals will be delivered to the punch and typewriter except for wind speed.

In the interests of clarity in the discussion which follows, reference will be made to the parameters actually being measured at the main stations rather than to basic input channels, which are (1) dry-bulb temperature/soil temperatures—nine sampling points; (2) wet-bulb—nine sampling points; (3) insolation, (4) albedo, (5) net radiation, (6) wind direction, (7) soil heat flux, and (8) wind speed—eight sampling points. Basic, as used here, means in the sense that eight different information channels are available without modification to the readout system itself.

Figure 24 is a block diagram of the control logic showing the paths of the various logic pulses,* and in the main the blocks in this diagram represent like-named chassis which are discussed individually. Exceptions are the blocks marked "Main One-Minute Sequence," "Alternate One-Minute Sequence," "Subroutine A" (all parts of the main programmer chassis), and the four subroutine blocks (all parts of the typing subroutines chassis).

Table 5 shows the printing format for the basic 5-min cycle employed in the automatic stations. In this table, although wet-bulb temperature values are shown, an optional choice of wet-bulb reference voltage can be made (see p. 31). Exercise of the reference option does not, however, change the minute-by-minute readout of the wet- and dry-bulb reference voltages, the variation of which from 4000 is a direct measure of temperature reading error during a given minute. Any negative-valued parameters have the minus sign shown preceding the first digit of the specific data word, as for instance, the wind-direction values in lines 1 and 2. As indicated, temperature values are read as if the decimal point were between the second and third digit,

---

*Here and in subsequent discussion relative to program control the term "pulse" or "control signal" refers to a potential of 50 v DC above common ground.

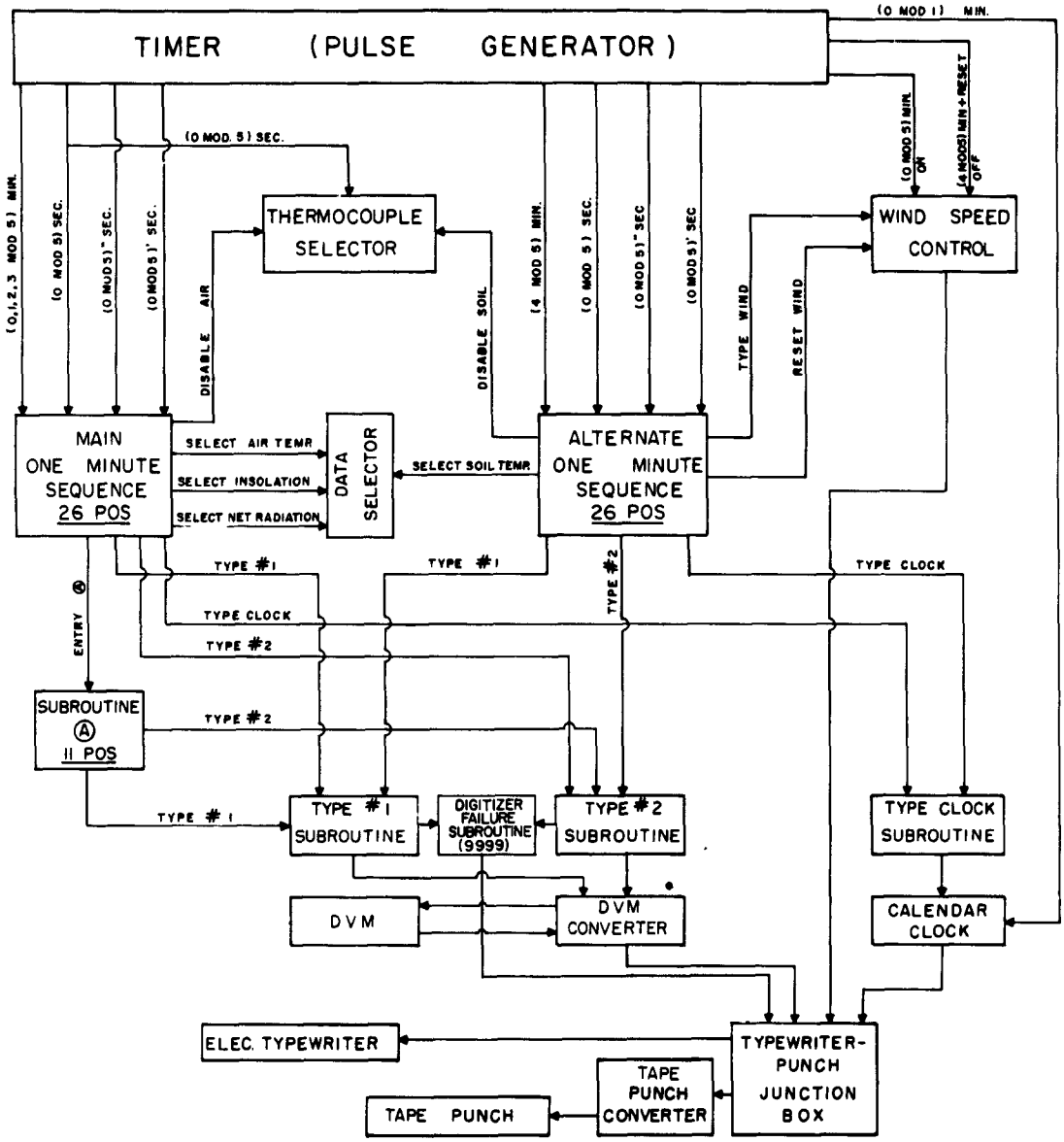

CONTROL BLOCK DIAGRAM

FIGURE 24

Table 5. Printing Format for Any Five-Minute Period

```
09131121     2934 2409 2858 2350 2784 2289 2820 2217 2726 2173 2478 2158 2732 2130 2731 2126 4000 4000 2287 0389 1944-0049
09131122     2993 2510 2868 2412 2831 2289 2762 2249 2738 2206 2726 2160 2717 2137 2717 2136 4000 4000 2288 0389 1947-0400
09131123     2869 2372 2836 2275 2866 2201 2834 2194 2864 2249 2830 2211 2862 2174 2860 2174 4000 4000 2288 0379 1935 1399
09131124     2983 2499 2852 2409 2773 2266 2789 2207 2854 2269 2807 2276 2812 2200 2807 2190 4000 4000 2296 0389 1936 3173
09131125     4373 4430 4428 4482 4447 4481 4453 0029
09131125   0142       0190       0202       0236       0251       0287       0330       0345
```

First Minute - Line 1
Date/time, 1/4-m dry bulb, 1/4-m wet bulb, 1/2-m dry bulb, 1/2-m wet bulb, 1-m dry bulb, 1-m wet bulb, 2-m dry bulb, 2-m wet bulb, 4-m dry bulb, 4-m wet bulb, 8-m dry bulb, 8-m wet bulb, 16-m dry bulb, 16-m wet bulb, 32-m dry bulb, 32-m wet bulb, dry-bulb reference, wet-bulb reference, insolation, reflected insolation, net radiation, wind direction.

Second Minute - Line 2 - Same as Line 1 format

Third Minute - Line 3 - Same as Line 1 format

Fourth Minute - Line 4 - Same as Line 1 format

Fifth Minute - Line 5
Date/time, 3-cm soil temperature, 6-cm soil temperature, 12-cm soil temperature, 25-cm soil temperature, 40-cm soil temperature, 65-cm soil temperature, 100-cm soil temperature, soil heat flux.

Fifth Minute - Line 6
Date/time, 1/4-m wind speed, 1/2-m wind speed, 1-m wind speed, 2-m wind speed, 4-m wind speed, 8-m wind speed, 16-m wind speed, 32-m wind speed.

The sixth minute would begin a new five-minute cycle.

DATE/TIME	TEMPERATURE	INSOLATION, ALBEDO, NET RADIATION, SOIL HEAT FLUX	WIND DIRECTION	WIND SPEED
xx xx xx xx Month Day Hour Minute	xx.xx°C	.0xxxx cal/cm^2/sec	xxx.x degrees from North	xxxx cm/sec

or to hundredths of a degree Centigrade and, as noted in the section under temperature measurements, these values are approximately 4 3/4-sec integrations or, more precisely, the values at the end of 4 3/4 sec of tracking. Wind speed values in cm/sec are 4-min averages for the four minutes preceding the minute in which readout occurs. Insolation, albedo, net radiation, soil heat flux and wind-direction readings are instantaneous values with the units and significance shown. The sign convention employed for the four radiation readings is as follows: With the exception of albedo, which is always considered positive, energy flow towards a hypothetical unit area at the earth-atmosphere interface is positive and away from this surface, negative. Thus: Insolation values are positive (the small negative values received at night from Eppley pyrheliometers are due to differential cooling of the thermopile surfaces and have no physical significance); albedo is positive; net radiation is positive in the day-time and negative at night; soil heat flux is negative in the day-time and positive at night.

Table 6 shows the punch-card format for any 5-min period although it should be understood that this is the punch-card format extracted from the punched paper tape, which is simultaneously punched character-per-character with the typewriter print-out. There are some differences, however, between the printing format and the punch format, which is the equivalent of saying that not every impulse sent to the typewriter is sent to the tape punch and vice versa. For example, in the tape record (and in the punch-card format) the sign is always given whether plus or minus and is punched coincidentally with the fourth digit of the data group whereas in the printed format only the negative sign is typed and prior to the first digit of the four-digit word. Also, a single-digit card-type preceding the date/time groups is punched in the paper tape but is not typed in the printing format. The date/time group in a type 2 card is not shown in the printing format and is generated by a duplication signal in the program card of the tape-to-card converter. There are other obvious differences, all of which may be summarized as follows: The typewriter does not receive plus signs (space is substituted), duplication commands, card-type digits or card-release commands. The tape punch does not receive tabulate, space, or carriage return commands.

Table 7 shows the program time-sequence followed during a basic 5-min cycle but in a general rather than an exact sense. More precisely, at this point in the discussion, the effort of explanation is concerned with the how of the program operation as opposed to the why, and Table 7 is helpful in obtaining this objective even though it is not exactly correct in the time-sequence. For example, this table shows that at zero minutes and 50 seconds the insolation and reflected insolation are typed out and then at zero minutes and 55 seconds the net radiation and wind direction are typed out. This is not true although the table up to this point has been precise. In actuality, following the type-out of the dry- and wet-bulb reference voltage which started at zero minutes and 45 seconds, the insolation, albedo, net radiation and wind direction are typed out on signal from the main programmer,

Table 6. Punch Card Format for Any Five-Minute Period

Column No.	Type 1 Card	Type 2 Card	Type 3 Card	Type 4 Card
1	1	2	3	4
2-3	Month	Month	Month	Month
4-5	Day	Day	Day	Day
6-7	Hour	Hour	Hour	Hour
8-9	Minute	Minute	Minute	Minute
10-13	1/4-m D.B.	Dry-Bulb Ref. Voltage	3-cm Soil T.	1/4-m Wind Speed
14-17	1/4-m W.B.	Wet-Bulb Ref. Voltage	6-cm Soil T.	1/2-m Wind Speed
18-21	1/2-m D.B.	Insolation	12-cm Soil T.	1-m Wind Speed
22-25	1/2-m W.B.	Reflected Insolation	25-cm Soil T.	2-m Wind Speed
26-29	1-m D.B.	Net Radiation	40-cm Soil T.	4-m Wind Speed
30-33	1-m W.B.	Wind Direction	65-cm Soil T.	8-m Wind Speed
34-37	2-m D.B.		100-cm Soil T.	16-m Wind Speed
38-41	2-m W.B.		Soil Heat Flux	32-m Wind Speed
42-45	4-m D.B.			
46-49	4-m W.B.			
.	.			
.	.			
.	.			
.	.			
66-69	32-m D.B.			
70-73	32-m W.B.			

Month is given as 01 to 12

Day is given as 01 to 31

Hour is given as 00 to 23

Minute is given as 00 to 59

Note that all data elements, columns 10-73, are given as four-digit groups—exactly as in the print-out—with the sign being punched coincidentally with the fourth digit of the group; eleven and twelve punches denote negative and positive, respectively.

Table 7. Program Time Sequence

Time Min—Sec	Start Wind	Advance Air Selector	Type #1 Digitizer	Type #2 Digitizer	Latch Data Selector	Type Clock	Duplicate Date/Time	Stop Wind	Advance Soil Selector	Type Wind	Reset Wind
0 00	x	x			AIR	x					
0 05		x	DB	WB							
0 10		x	DB	WB							
0 15		x	DB	WB							
0 20		x	DB	WB							
0 25		x	DB	WB							
0 30		x	DB	WB							
0 35		x	DB	WB							
0 40		x	DB	WB							
0 45			DB REF	WB REF							
0 50			INS	RINS	INS		x				
0 55			RN	DIR	RN						
1 00		x			AIR	x					
1 05		x	DB	WB							
1 10		x	DB	WB							

Table 7. Program Time Sequence (Continued)

Time Min—Sec	Start Wind	Advance Air Selector	Type #1 Digitizer	Type #2 Digitizer	Latch Data Selector	Type Clock	Duplicate Date/Time	Stop Wind	Advance Soil Selector	Type Wind	Reset Wind
1 15		x	DB	WB							
1 20		x	DB	WB							
1 25		x	DB	WB							
1 30		x	DB	WB							
1 35		x	DB	WB							
1 40		x	DB	WB							
. . .	. . .	. . .	. . .	. . .	. . .	. . .	. . .	. . .	. . .	. . .	. . .
3 30		x	DB	WB							
3 35		x	DB	WB							
3 40		x	DB	WB							
3 45			DB REF	WB REF			x				
3 50			INS	RINS	INS						
3 55			RN	DIR	RN						
4 00					SOIL	x		x	x		
4 05			ST						x		

Table 7. Program Time Sequence (Continued)

Time Min—Sec	Start Wind	Advance Air Selector	Type #1 Digitizer	Type #2 Digitizer	Latch Data Selector	Type Clock	Duplicate Date/Time	Stop Wind	Advance Soil Selector	Type Wind	Reset Wind
4 10			ST						x		
4 15			ST						x		
4 20			ST						x		
4 25			ST						x		
4 30			ST						x		
4 35			ST	SF							
4 40						x					
4 45										x	
4 50											
4 55											x
5 00	x	x			AIR	x					
5 05		x	DB	WB							

DB = Dry-bulb Temperature
WB = Wet-Bulb Temperature
ST = Soil Temperature
SF = Soil Heat Flux
INS = Insolation
RINS = Reflected Insolation
RN = Net Radiation
DIR = Wind Direction

immediately on receipt of a signal from the typing subroutine that the previous word has been typed. Thus, in actuality, line 1 shown in Table 5 has been completely typed and the carriage returned at approximately zero minutes and 54 seconds and the program sequence does not return to the precise schedule indicated in Table 7 until one minute and zero seconds. The same holds true, of course, for the period after one minute and 45 seconds, two minutes and 45 seconds, etc.

In general, then, the program sequence is as follows. Starting at zero time (see Table 7), the clock is typed and punched, the anemometer counters and converters are started and simultaneous measurement begun of the wet- and dry-bulb temperature at 1/4-m. At the end of five seconds, the 1/4-m data are selected for typing and punch-out and measurement shifts to the 1/2-m level. At ten seconds, the 1/2-m data are selected for readout and sampling shifts to the 1-m level, etc. At the end of 45 seconds all of the temperature levels have been sampled and printed, and readout of dry-bulb reference, wet-bulb reference, insolation, albedo, net radiation and wind direction, in that order, is begun and is completed by the end of 54 seconds, approximately, and at 60 seconds exactly all of the foregoing is repeated, except that the anemometer counters and converters are not reset. This repetition is carried through four minutes. At exactly 240 seconds, the anemometer counters and converters are stopped and sampling and readout of soil temperatures is begun, following the same time-sequence used for the air temperatures.

At 280 seconds the soil heat flux is read and at 283 seconds, approximately, readout of the wind profile is begun and is completed at approximately 293 seconds, at which time the counters are reset to zero, then impulsed to 20 to allow for the conversion from wind counts to cm/sec; the typewriter carriage is returned; the tape punch receives seven advance impulses so as to provide a separation between 5-min sequences on the tape and at exactly 300 seconds the basic 5-min sequence is begun again.

Figure 25 is the schematic of the timer or pulse generator which provides all timing pulses for control of the readout system. The main element in this pulse generator is a 60-cycle Haydon timer which provides two microswitch closures at 5-sec and 1-min intervals with the 1-min closure occurring approximately 1.5 sec before the 5-sec closure and remaining closed approximately 1.5 sec after the 5-sec microswitch is opened. The microswitch, opened and closed by the 5-sec cam, energizes the mercury relay through a 4mfd capacitor such that the 50 v always on the arm (pin 3) of the mercury relay is transferred to pin 1 and to output terminal E every five seconds for a duration of 225 ms. This pulse is known as (0 MOD 5) SEC in the program code. The pulse delivered at terminal D, which comes through the open condition of the 5-sec microswitch is of 3.7-sec duration, or more significantly as far as program control is concerned, a constant 50 v is supplied at terminal D except for 1.3 sec at the beginning of every 5-sec period. This absence of 50 v is known as (0 MOD 5)" SEC, where the double prime

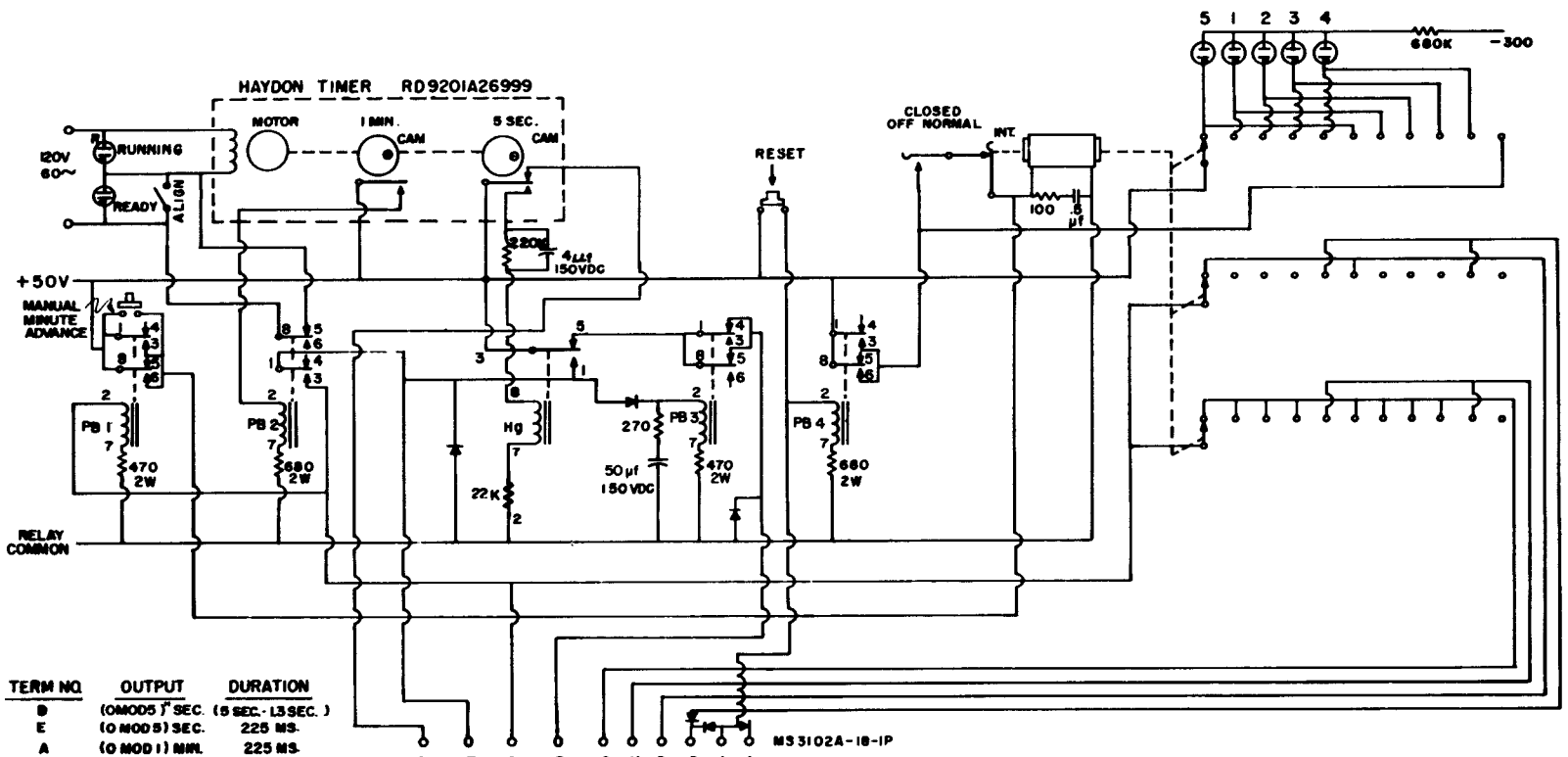

TERM NO.	OUTPUT	DURATION
D	(0 MOD 5) 1" SEC.	(5 SEC. - 1.3 SEC.)
E	(0 MOD 5) SEC.	225 MS.
A	(0 MOD 1) MIN.	225 MS.
F	(0 MOD 5)' SEC	(5 SEC. - 320 MS.)
G	(0,1,2,3 MOD 5) MIN.	225 MS.
H	(4 MOD 5) MIN.	225 MS.
B	(0 MOD 5)	225 MS.
C	(4 MOD 5) MIN. + RESET	
I	RESET	
J	RESET + COUNTER RESET	

TIMER

FIGURE 25

indicates a duration different from the (0 MOD 5) SEC pulse and complementary to it; that is, the (0 MOD 5) SEC pulse is 50 v high and of 225 ms duration whereas the (0 MOD 5)' SEC pulse is an absence of 50 v of 1300 ms duration. The same convention holds for the (0 MOD 5)' SEC appearing at terminal F of 320 ms duration.

With the exception of RESET, COUNTER RESET, and the single- and double-prime pulses noted above, all control pulses appearing at the various terminals shown in Fig. 25 are derived by gating the (0 MOD 5) SEC pulse which permits necessary synchronization and preservation of the 225-ms duration of all pulses except the four noted. For example, consider the pulses appearing at terminals A and B, which are (0 MOD 1) MIN and (0 MOD 5) MIN respectively. The 1-min cam which energizes PB2 provides a gating function of one minute thereby giving the (0 MOD 1) MIN pulse of 225-ms duration. Additional gating is provided through the stepping-switch for 5-min periodicity yielding the (0 MOD 5) MIN pulse at terminal B and also (4 MOD 5) MIN appearing at terminal H, etc.

Figures 26 and 27 are timing diagrams which show the relationships between the various output pulses generated by the timer.

The align switch shown in Fig. 25 is in reality the ON switch for starting the program sequence. When this switch is turned off, the timer does not stop immediately but continues operation until the top dead-center position is reached or until a 1-min pulse is generated which opens PB2. At this time the READY light is activated and correct sequencing of the program as outlined in Table 7 can be started at any selected time by throwing the align switch to the ON position, approximately 1.5 sec before the desired starting time.

The RESET switch on the timer provides for manual resetting of the timer stepping-switch to the HOME position and furnishes, through terminals C, I and J, the necessary signals to home the stepping-switches in the thermocouple selector box, the main programmer, the typing subroutines, and the wind-speed control unit.

The manual minute-advance switch (Fig. 25) is never employed in normal operation but is used during maintenance and trouble-shooting to permit selection of particular minutes without waiting for the program to advance through the normal cycle.

In the preceding discussion concerning the measuring systems it was pointed out that the cabling tables following the circuit schematics were not necessary for understanding of the measuring system involved and had been included primarily for maintenance purposes. This will not be true with regard to the cabling schedules that appear henceforth, or specifically, these tables are useful to the understanding of the readout system. For example, Table 8, which is the cabling table for the timer, shows immediately that the (0 MOD 1) MIN pulse goes only to the calendar clock and, therefore, that the only

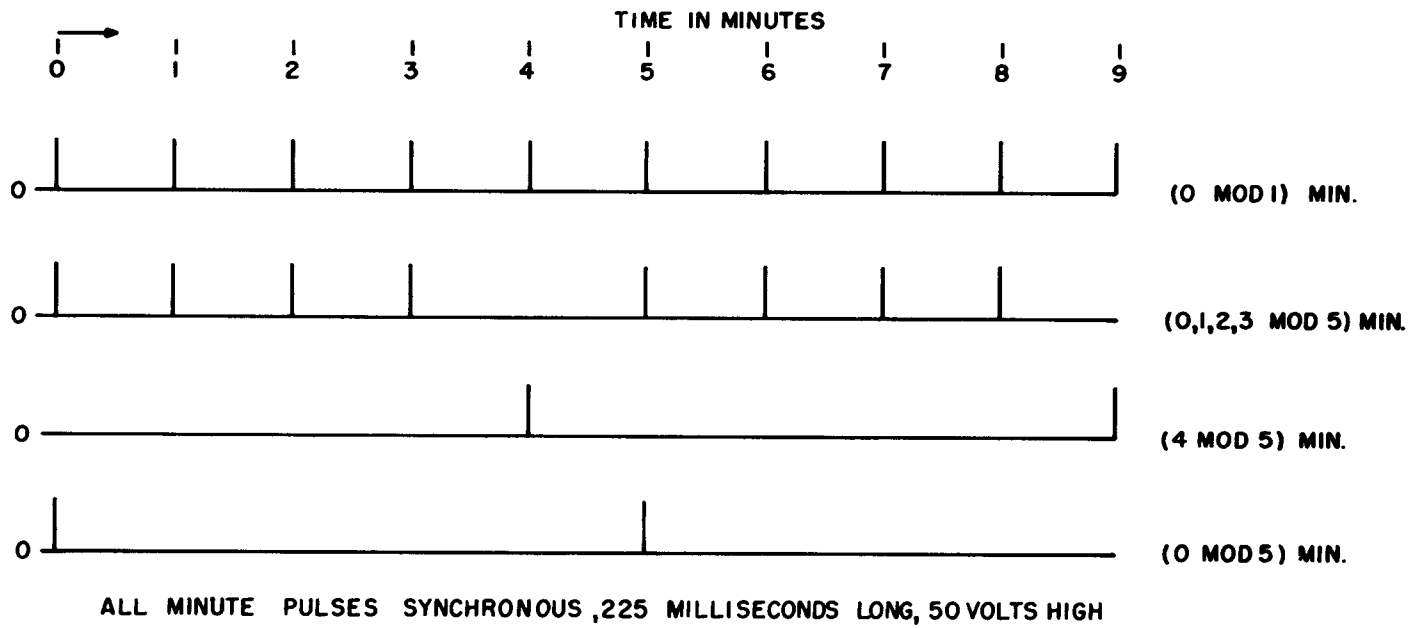

TIMING DIAGRAM, MINUTE PULSES

FIGURE 26

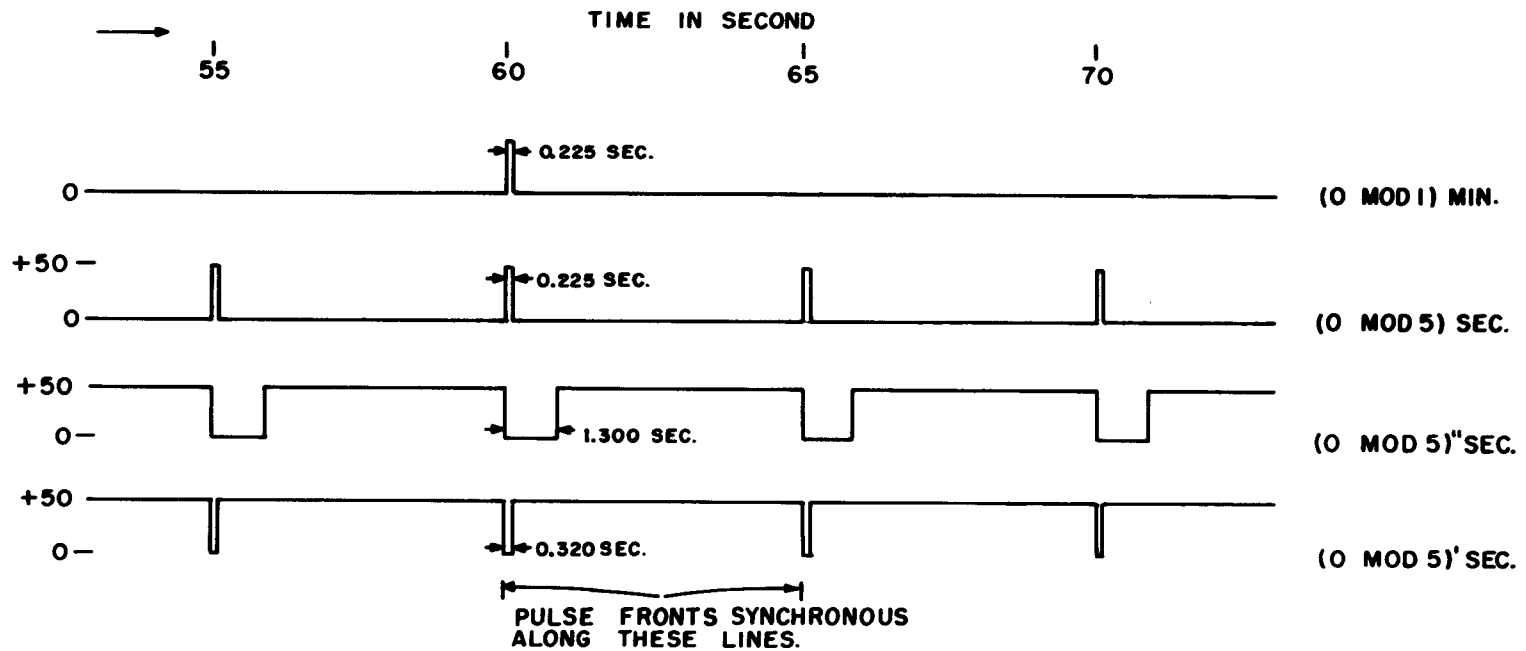

TIMING DIAGRAM, FIVE SECOND PULSES

FIGURE 27

Table 8. Timer Cabling

Connector	Pin #	Function	Connects to
MS 3102 A-18-1P	A	(0 MOD 1) MIN	B.T. #1 on Clock
	B	(0 MOD 5) MIN	Wind Speed Control Unit Octal, Pin 5
	C	(4 MOD 5) MIN + Reset	Wind Speed Control Unit Octal, Pin 7
	D	(0 MOD 5)" SEC	Main Programmer, Pin R
	E	(0 MOD 5) SEC	Main Programmer, Pin T; Analog Memory, B.T. #2; Precision Resistor Box, B.T. #2
	F	(0 MOD 5)' SEC	Main Programmer, Pin U
	G	(0,1,2,3 MOD 5) MIN	Main Programmer, Pin B
	H	(4 MOD 5) MIN	Main Programmer, Pin b; Timer Contacts of Wet-Bulb Cut-out Circuit
	I	Program Reset	Main Programmer, Pin X
	J	Program Reset + Counter Reset	Wind Speed Control Unit Octal, Pin 3

function of this particular pulse is the control to the clock.

The sole purpose of the calendar clock, represented schematically in figures 28a, 28b, 28c and 28d, is to provide eight-digit time-and-date identification for each minute of readout. It may be set for any date or time through use of the eight control switches on the panel and the SET button which moves the stepping-switches to the proper switch settings. Conversely, in conjunction with the six indicator lights, each of which has one side wired to the arm of its corresponding control switch, the control switches can be used to determine the contents of the clock at any time.

The output of the clock, like that of the DVM converter, the wind-speed control unit, and the punch junction box (all to be discussed later), is terminated on the chassis in a 15-pin Cinch Jones connector (see Table 9). This output, as can be seen from Fig. 28, is derived from the positions of the top deck of each of the stepping-switches, which in this drawing show the positions cabled together and going "to typewriter and punch," although as can be seen from Table 9, it would be more correct to say "to typewriter—punch junction box."

In order to understand the stepping-switch logic employed in the calendar clock, start with Fig. 28a with the entry of the (0 MOD 1) MIN pulse. This energizes PB1 which puts 50 v to the stepping-switch coil (assuming PB7 is de-energized which will be the

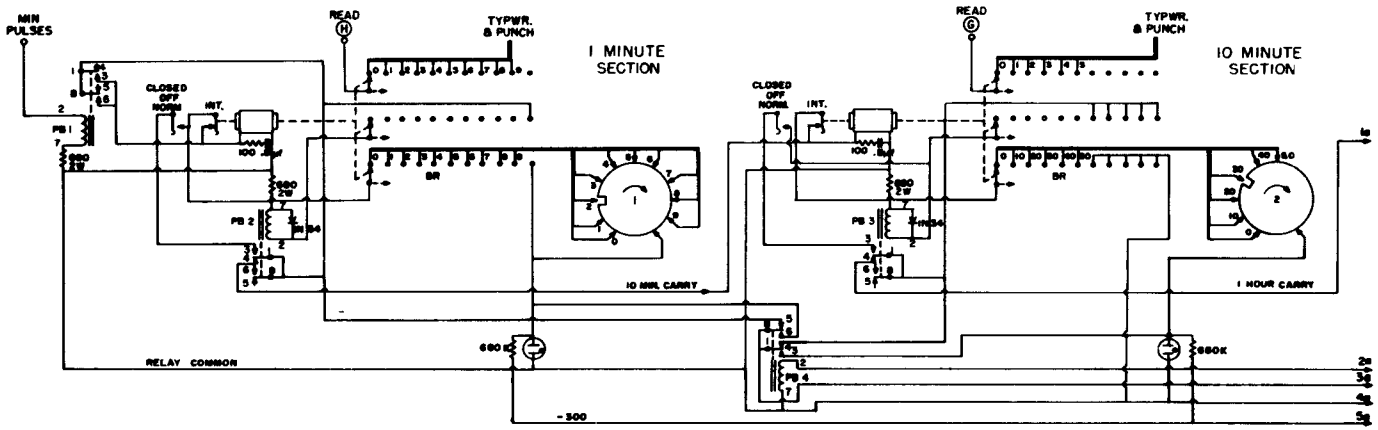

CALENDAR CLOCK
FIGURE 28a

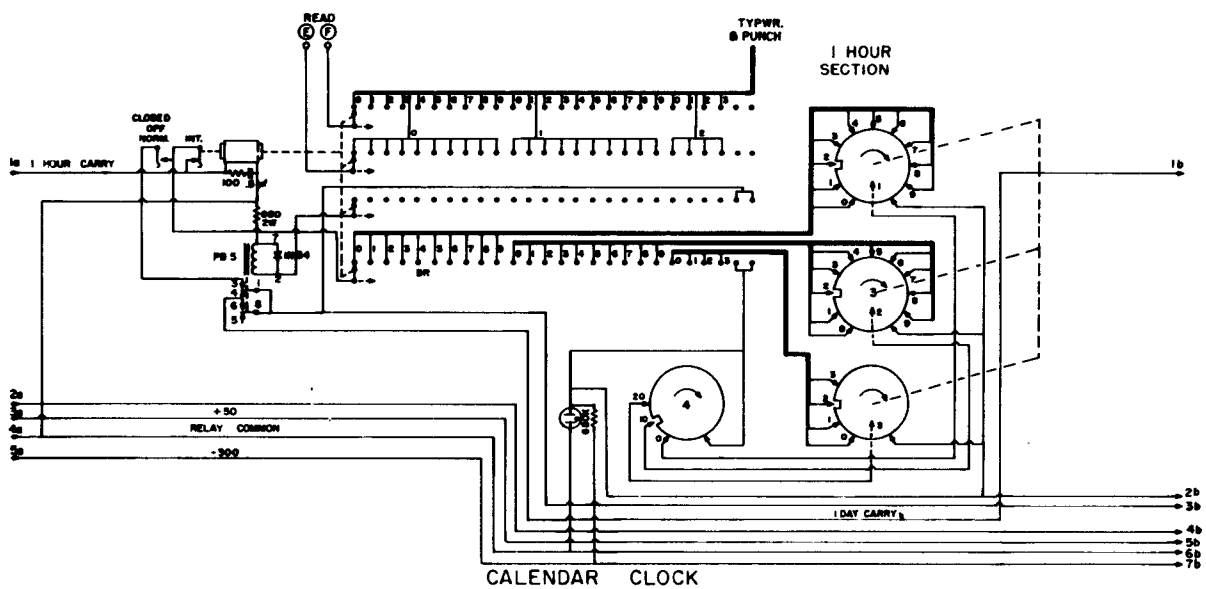

CALENDAR CLOCK
FIGURE 28b

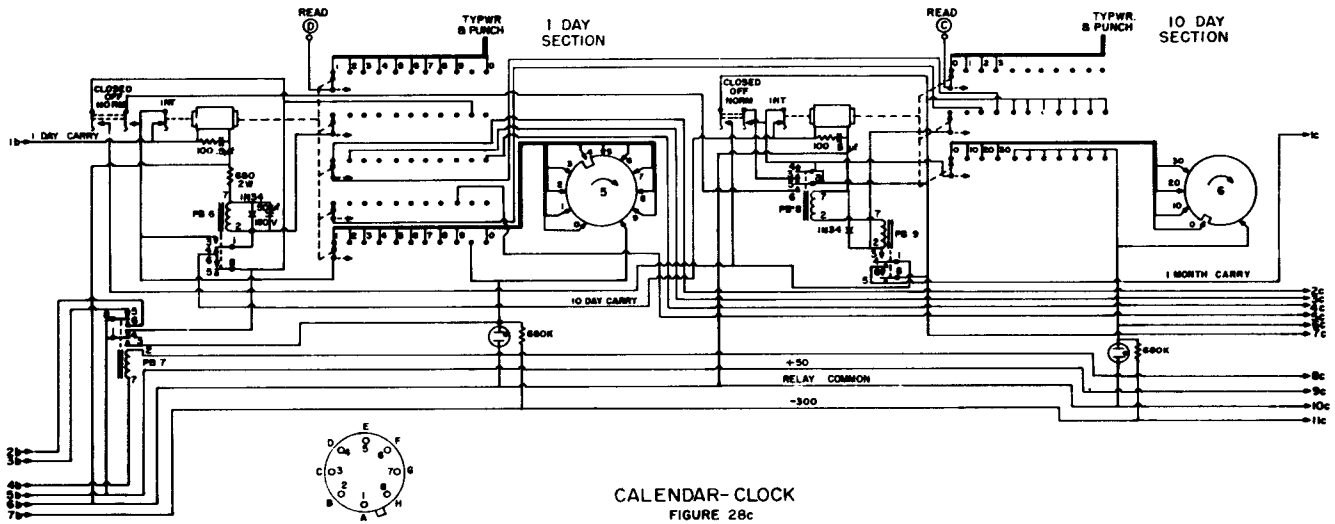

CALENDAR-CLOCK
FIGURE 28c

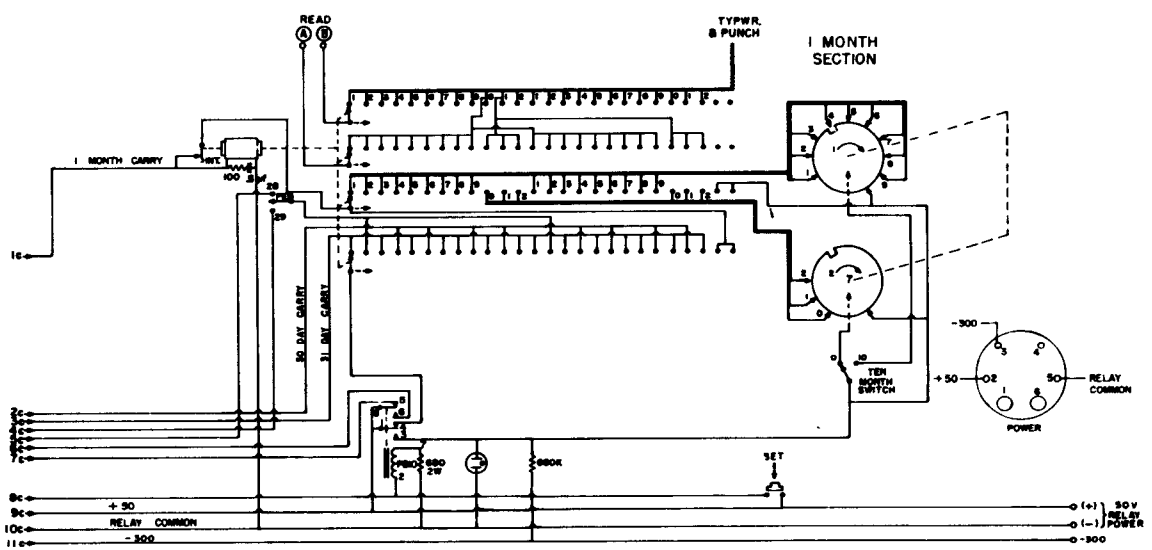

CALENDAR CLOCK
FIGURE 28 d

Table 9. Calendar Clock Cabling

Connector	Pin #	Function	Connects to
Barrier Strip	1	(0 MOD 1) MIN	Timer, Pin A
	2		N.C.
Amphenol # 86-PM8 Plug	1	Type Month Digit 1	Typing Subroutines, Pin R
	2	Type Month Digit 2	Same Pin U
	3	Type Day Digit 1	Same Pin N
	4	Type Day Digit 2	Same Pin P
	5	Type Hour Digit 1	Same Pin T
	6	Type Hour Digit 2	Same Pin M
	7	Type Min. Digit 1	Same Pin V
	8	Type Min. Digit 2	Same Pin S
Cinch Jones P-315-DB Plug	1	Type & Punch 1	Typewriter Punch Junction Box 15-Pin, Pin 1
	2	Same 2	Typewriter Punch Junction Box 15-Pin, Pin 2
	3	Same 3	Typewriter Punch Junction Box 15-Pin, Pin 3
	4	Same 4	Typewriter Punch Junction Box 15-Pin, Pin 4
	5	Same 5	Typewriter Punch Junction Box 15-Pin, Pin 5
	6	Same 6	Typewriter Punch Junction Box 15-Pin, Pin 6
	7	Same 7	Typewriter Punch Junction Box 15-Pin, Pin 7
	8	Same 8	Typewriter Punch Junction Box 15-Pin, Pin 8
	9	Same 9	Typewriter Punch Junction Box 15-Pin, Pin 9
	10	Same 10	Typewriter Punch Junction Box 15-Pin, Pin 10
	11	Punch (-) Sign	Typewriter Punch Junction Box 15-Pin, Pin 11
	12	Punch (+) Sign	Typewriter Punch Junction Box 15-Pin, Pin 12
	13	Type (+) Sign, (Space)	Typewriter Punch Junction Box 15-Pin, Pin 13
	14	Type (-) Sign, (Hyphen)	Typewriter Punch Junction Box 15-Pin, Pin 14
	15	Tabulate	Typewriter Punch Junction Box 15-Pin, Pin 15

case unless the SET switch is depressed). Only one step of the switch is accomplished, of course, inasmuch as the (0 MOD 1) MIN pulse, which is 225 ms in duration, cocked the stepping-switch at the beginning of the pulse and allowed it to step at the end of the pulse. Assume, for the moment, that this step took the stepping-switch to position #9; the wiper on the third deck (with bridging contacts) also received this pulse and since the stepping-switch was off the HOME position, the same pulse was delivered through the OFF NORMAL contacts to the normally open contacts of PB2. However, no further action resulted since the control switch for the 1-min section was not on the #9 position and PB2 was not energized. Before another (0 MOD 1) MIN pulse is received, a pulse will have been received from the clock typing-subroutine through terminal H, shown in Fig. 28a, thus sending an impulse through the punch junction box to the #9 solenoid of the typewriter and the first, fourth and fifth punch channels of the tape punch, resulting in a digital nine being typed and punched.

At the beginning of the next minute the (0 MOD 1) MIN pulse is again received, moving the stepping-switch to the last position on the stepping-switch decks which, as can be seen in the schematic, is blank on the first deck. The wiper on the second deck, however, is now connected to 50-v which energizes PB2, thus connecting the normally open contacts of PB2 to the 50-v and giving a 10-min carry, or an impulse, to the 10-min section stepping-switch, which steps from the HOME, or zero position, to the #1 position. At the same time the other normally open contact of PB2 sends a 50-v pulse through the OFF NORMAL contacts of the 1-min section stepping-switch, which steps it to the HOME position.

The above then constitutes the basic operating procedure within the calendar clock with successive (0 MOD 1) MIN pulses advancing the 1-min and 10-min section stepping-switches until a 1-hr carry is eventually pulsed, thus moving the hour-section of the stepping-switch off the HOME position, and so on through the one-day, ten-day and month sections. Note that the control switch within the 1-min section positioned at #2 will result in the neon Postlite turning on when the stepping-switch is in the #2-digit position (the third position of the stepping-switch) since in this position no connection is made between the arm of the switch and position #2, thus permitting the lamp to conduct. Such is not the case with any of the other positions inasmuch as they are all connected to the arm and thence back through the low impedance of the stepping-switch coil to ground.

This completes the discussion of the calendar clock except to note that in normal operation, the program is usually started at such a time that the clock can be set to minutes ending in zero or five, thus allowing each 5-min data sequence to begin with minutes ending in one or six. For example, let us say the program is to begin at 1850 on 14 July. The ten-month switch would be set to zero; the one-month switch would be set to seven; the ten-day switch would be set to ten; the one-day switch set to four; the ten-hour switch set to ten; the one-hour switch to eight; the ten-minute switch set to 50 and the one-minute

switch set to zero. The SET switch would then be depressed which would set all the stepping-switches for the indicated date and time and turn on the six indicator lights. The program would be started by closing the align switch on the timer, Fig. 25, at 1 1/2-sec before 1851 since, as noted previously, the 1-min microswitch closes approximately 1 1/2 sec before the 5-sec microswitch closes.

Figure 29 shows the wiring diagram for the main programmer chassis which contains two 26-position stepping-switches, one for the air sequence and one for the soil sequence, and an 11-position stepping-switch for subroutine A. All three of the stepping switches are in the HOME or #1 position before the program is started, this being insured by pressing the RESET button on the timer chassis which energizes PB1 of the programmer chassis, thus putting 50-v on the air and soil sequence stepping-switches through the OFF NORMAL contacts which would be closed if the stepping-switches were not already in the HOME position (the subroutine A stepping-switch is automatically homed at any time PB4 is not energized). At any other time these three stepping-switches move independently of each other, each being held in given positions while waiting for the appropriate advance signal.

As can be seen from tables 10 and 12 the air or main sequence is started by the (0, 1, 2, 3 MOD 5) MIN pulse while the alternate or soil sequence starts with the (4 MOD 5) MIN pulse. There are some instances in the program in which it is necessary that a command signal be given for a small, fixed time-interval. This is accomplished through the DELAY deck by wiring the appropriate DELAY hub directly to the ENTRY of delay relays PB2 or PB3 (DELAY #1 and DELAY #2) which introduces a delay equal to the pull-in time of the relay which is set by the 25 mfd capacitor across the relay coil. When the relay is energized a 50-v pulse through the EXIT is delivered to the ADVANCE hub of the programmer command position that initiated the delay.

There are two such delay relays inasmuch as occasions arise in which it is necessary to have delays on two adjacent COMMAND hubs which would be an impossible situation for a single delay relay, since the relay would still be energized when the second delay was called for and thus could not provide it.

One deck on each of the programmer stepping-switches has Drake Postlites connected to each hub, thus showing at any instant the position of the programmer stepping-switches.

It should be noted that in no instance are the COMMAND hubs of the programmers employed to make or break current paths; rather the stepping-switch is always advanced on commands through the ADVANCE hubs such that the mercury relays do the switching after the fact as far as the COMMAND hubs are concerned.

It would be extremely difficult and confusing to attempt to provide a complete wiring diagram of the programmer and its

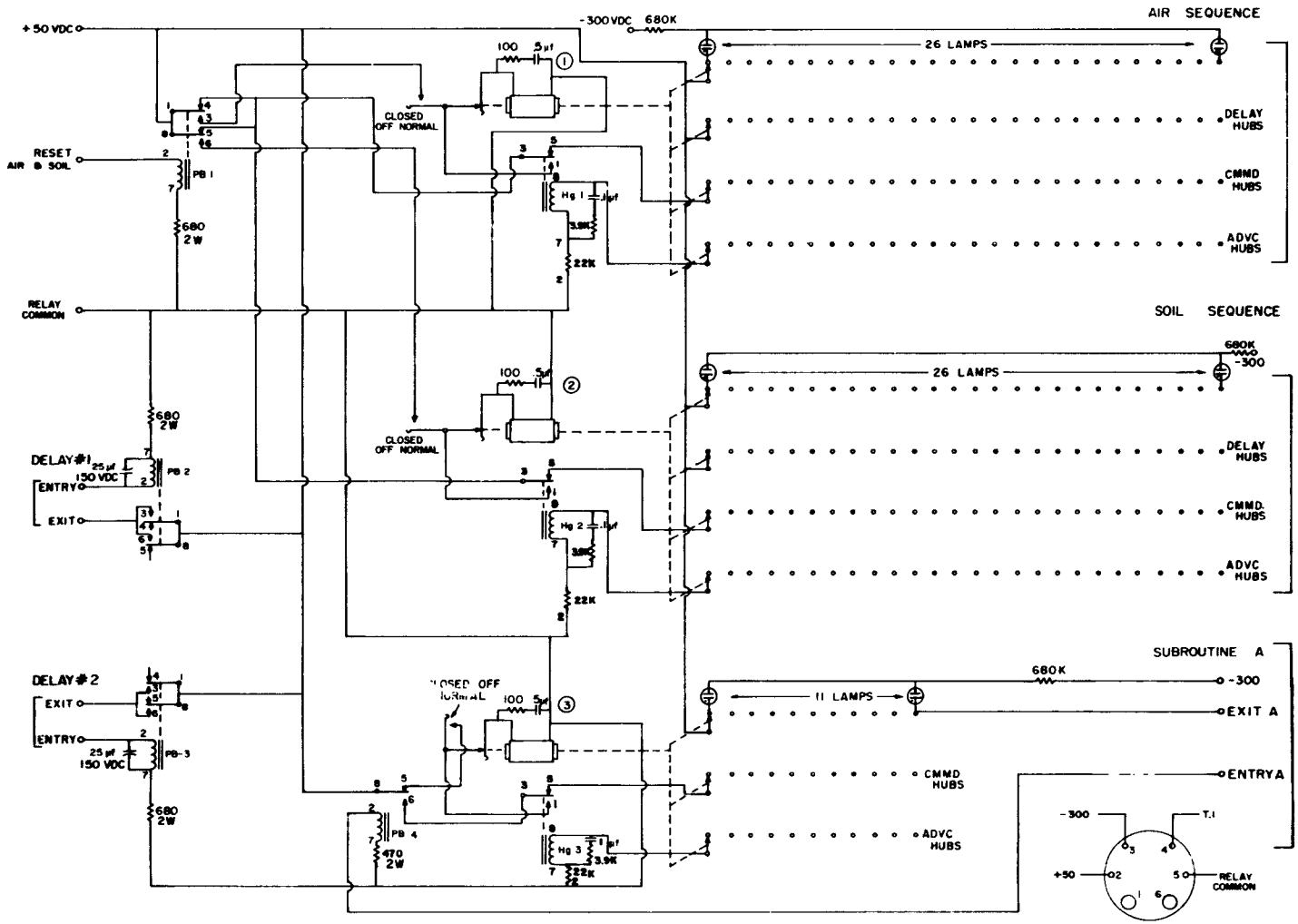

MAIN PROGRAMMERS

FIGURE 29

Table 10. Air Program Sequence

Step #	Command	Advance Condition	Delay
1	Disable Air	(0,1,2,3 MOD 5) MIN	
2	Punch Card Type #1	Delay #1 Exit	Delay #1 Entry
3	Select Air	(0 MOD 5)" SEC	
4	Type Clock	(0 MOD 5) SEC	
5	No-Op	(0 MOD 5)' SEC	
6	Type #1 Digitizer	Exit #1	
7	Enter Subroutine **A**	Exit A	
8	No-Op	(0 MOD 5)' SEC	
9	Type #1 Digitizer	Exit #1	
10	Enter Subroutine A	Exit A	
11	Release Card	Delay #1 Exit	Delay #1 Entry
12	No-Op	(0 MOD 5)" SEC	
13	Punch Card Type #2	Delay #1	Delay #1 Entry
14	Duplicate Date/Time	Delay #2 Exit	Delay #2 Entry
15	No-Op	Unconditional	
16	Type #1 Digitizer	Exit #1	
17	Type #2 Digitizer	Exit #2	
18	Select Insolation	Delay #1 Exit	Delay #1 Entry
19	No-Op	Delay #2 Exit	Delay #2 Entry
20	Type #1 Digitizer	Exit #1	
21	Type #2 Digitizer	Exit #2	
22	Select Net Radiation	Delay #1 Exit	Delay #1 Entry
23	No-Op	Delay #2 Exit	Delay #2 Entry
24	Type #1 Digitizer	Exit #1	
25	Type #2 Digitizer	Exit #2	
26	Release Card and Carriage Return	Delay #1 Exit	Delay #1 Entry

connections to other parts of the system and tables 10, 11, 12 and 13 are provided in lieu thereof, the last of these being the cabling table and the first three showing the sequence for air, subroutine A, and soil, respectively.

As an example of the use of these tables and Fig. 29 to explain the logic employed in the programmers, consider Table 10, the air program sequence. As noted earlier, at the beginning of any basic 5-min sequence, the air sequence stepping-switch will be in the HOME position. Since PB1 and HG1 on Fig. 29 are not energized, 50-v is present on the wiper of the COMMAND deck, thus transmitting 50-v to hub 1, thence to pin D of the 37-pin connector on the programmer chassis (see Table 13) and on to barrier terminal #4 in the precision resistor box, which disables the air-temperature selector switch of the thermocouple selectors (Fig. 12). Following initiation of the program, a (0, 1, 2, 3 MOD 5) MIN pulse is received (Table 10, step 1) which energizes HG1, thus moving the stepping-switch to position #2. Again looking at Table 10, the COMMAND is to punch card-type #1, which means that 50-v is supplied to pin E on the programmer chassis (Table 13) which carries the pulse to the typewriter-punch junction box for activation of the tape punch. The ADVANCE condition on step #2 is DELAY #1 exit, which means that entry is made into DELAY #1, thus insuring adequate time for the tape punch clutch solenoid to be energized, and the exit of DELAY #1 is fed back to the ADVANCE hub of position #2, which once again energizes HG1, stepping the stepping-switch to position #3. Here, the command is SELECT AIR which means a 50-v pulse is put on Pin F of the programmer for transmittal to the data selector. The ADVANCE condition on step #3 is (0 MOD 5)" SEC, which, by reference back to the timer schematic (Fig. 25) shows that 1.300 sec after initiation of (0 MOD 5) SEC, 50-v is applied to this ADVANCE hub. [Recall (0 MOD 5) SEC pulse began simultaneously with the pulse shown as the ADVANCE condition on step #1.]

The stepping-switch is now in position #4 which calls for type (and punch-out) of the clock and to ADVANCE on the (0 MOD 5) SEC pulse. From previous discussion of the program timing, it may be recalled that during this interval and while the clock is being typed, air temperatures at 1/4-m are being tracked for 4 3/4 sec. The stepping-switch is moved to the #5 position where the (0 MOD 5) SEC pulse is received (this being the second of these pulses since the program was started). The #5 COMMAND is marked as NO-OP, meaning that the particular hub is not active. The advance condition from #5 is the (0 MOD 5)' SEC which, by reference again to Fig. 27, shows that 320 ms after initiation of the second (0 MOD 5) SEC pulse, 50-v is applied to this ADVANCE hub moving the stepping-switch to position #6. The COMMAND is to type #1 digitizer with the ADVANCE being EXIT #1. Reference to Table 13 shows that this COMMAND results in a 50-v pulse being delivered to the typing subroutines and the DVM converter, which have not been discussed yet, and we will simply assume that the temperature values acquired during this first 4 3/4 sec of tracking have been delivered to the typewriter and punch, and a signal showing completion of this typing (EXIT #1) is returned as the ADVANCE condition on

Table 11. Subroutine A Sequence

Step #	Command	Advance Condition
1	Type #2 Digitizer	(0 MOD 5) SEC
2	No-Op	(0 MOD 5)' SEC
3	Type #1 Digitizer	Exit #1
4	Type #2 Digitizer	(0 MOD 5) SEC
5	No-Op	(0 MOD 5)' SEC
6	Type #1 Digitizer	Exit #1
7	Type #2 Digitizer	(0 MOD 5) SEC
8	No-Op	(0 MOD 5)' SEC
9	Type #1 Digitizer	Exit #1
10	Type #2 Digitizer	(0 MOD 5) SEC
11	(Exit)	

step #6, thus moving the main or air sequence to position #7.

The command on position #7 calls for entering subroutine A which means that **COMMAND** hub #7 is wired directly to **ENTRY A** on the subroutine stepping-switch (see Fig. 29) which energizes **PB4** thus allowing the subroutine A stepping-switch to move off the **HOME** position upon receipt of the appropriate **ADVANCE** which will energize mercury relay HG3. In order to follow the sequence through subroutine A, reference is made to Table 11 and following the same procedure outlined above, it can be seen that after a succession of eleven steps an **EXIT** signal of 50-v derived from the wiper of the lamp deck is fed back to **ADVANCE** hub #7 on the air programmer which then moves to position #8 and so on.

At some places in the sequences of the main programmers an unconditional advance will be shown. This means that that particular advance hub is permanently wired to the positive 50-v power terminal.

The data selector as shown schematically in Fig. 30 is nothing more than four sets of latching relays, each set being two Potter & Brumfield relays, which in this drawing are labeled A, B, C and D for the pairs rather than the usual PB1, PB2, etc. Referring to Table 14, as well as the data selector schematic, the procedure for operation is as follows: At the beginning of the basic 5-min cycle we may assume any configuration for A, B, C and D, that is, either latched or unlatched.

It will help in this discussion to visualize the "A" pair of relays as being A-1 and A-2 (for convenience call the upper coil and the lower contact pairs in the drawing A-1 and the upper pair of contacts and lower coil A-2).

Table 12. Soil Program Sequence

Step #	Command	Advance Condition	Delay
1	Disable Soil	(4 MOD 5) MIN	
2	Punch Card Type #3	Delay #1 Exit	Delay #1 Entry
3	Select Soil	(0 MOD 5)" SEC	
4	Type Clock	(0 MOD 5) SEC	
5	No-Op	(0 MOD 5)' SEC	
6	Type #1 Digitizer	(0 MOD 5) SEC	
7	No-Op	(0 MOD 5)' SEC	
8	Type #1 Digitizer	(0 MOD 5) SEC	
9	No-Op	(0 MOD 5)' SEC	
10	Type #1 Digitizer	(0 MOD 5) SEC	
11	No-Op	(0 MOD 5)' SEC	
12	Type #1 Digitizer	(0 MOD 5) SEC	
13	No-Op	(0 MOD 5)' SEC	
14	Type #1 Digitizer	(0 MOD 5) SEC	
15	No-Op	(0 MOD 5)' SEC	
16	Type #1 Digitizer	(0 MOD 5) SEC	
17	No-Op	(0 MOD 5)' SEC	
18	Type #1 Digitizer	Exit #1	
19	Type #2 Digitizer	(0 MOD 5) SEC	
20	Release Card and Carriage Return	Delay #2 Exit	Delay #2 Entry
21	No-Op	(0 MOD 5)" SEC	
22	Punch Card Type #4	Delay #1 Exit	Delay #1 Entry
23	Type Clock	Clock Typed	
24	Type Wind	Wind Typed	
25	Release Card and Carriage Return	Delay #2 Exit	Delay #2 Entry
26	Reset Counters	Reset O.K.	

Table 13, Main Programmer Cabling

Connector	Pin #	Function	Connects to
	A	Card Type #4	Typewriter Punch Junction Box 10-Pin, Pin F
	B	(0,1,2,3 MOD 5) MIN	Timer, Pin G
	C	Exit Digitizer #2	Typing Subroutines, Pin F
	D	Air Disable	Precision Resistor Box B.T. #4
	E	Card Type #1	Typewriter Punch Junction Box 10-Pin, Pin C
	F	Select Air	Data Selector 10-Pin Socket, Pin D
	G	Release	Typewriter Punch Junction Box 10-Pin, Pin H
	H	Select Insolation	Data Selector 10-Pin Socket, Pin C
	J	Card Type #2	Typewriter Punch Junction Box 10-Pin, Pin D
	K	Duplicate Date/Time	Typewriter Punch Junction Box 10-Pin, Pin B
	L	Select Net Radiation	Data Selector 10-Pin Socket, Pin B
	M	Exit Clock	Typing Subroutines, Pin H
	N	Wind Typed	Wind-Speed Control Unit Octal, Pin 2
	P	Type Digitizer #2	Typing Subroutines, Pin G; DVM Converter Octal 2, Pin 1
MS 3102A-28-21S Socket	R	(0 MOD 5)" SEC	Timer, Pin D
	S	Type Digitizer #1	Typing Subroutines, Pin C; DVM Converter Octal 1, Pin 1
	T	(0 MOD 5) SEC	Timer, Pin E
	U	(0 MOD 5)' SEC	Timer, Pin F
	V	Exit Digitizer #1	Typing Subroutines, Pin B
	W	Type Wind	Wind-Speed Control Unit Octal, Pin 1
	X	Program Reset	Timer, Pin I
	Z	Counter Reset O.K.	Wind-Speed Control Unit Octal, Pin 4
	a	Reset Counters	Wind-Speed Control Unit Octal, Pin 3
	b	(4 MOD 5) MIN	Timer, Pin H
	c	Soil Disable	Precision Resistor Box B.T. #3
	d	Card Type #3	Typewriter Punch Junction Box 10-Pin, Pin E
	e	Select Soil	Data Selector 10-Pin Socket, Pin A
	f	Type Clock	Typing Subroutines, Pin K
	g	Carriage Return and Release	Typewriter Punch Junction Box 10-Pin, Pin G
	h		N.C.
	j		N.C.
	k		N.C.
	m		N.C.
	n		N.C.
	p		N.C.
	r		N.C.
	s		N.C.

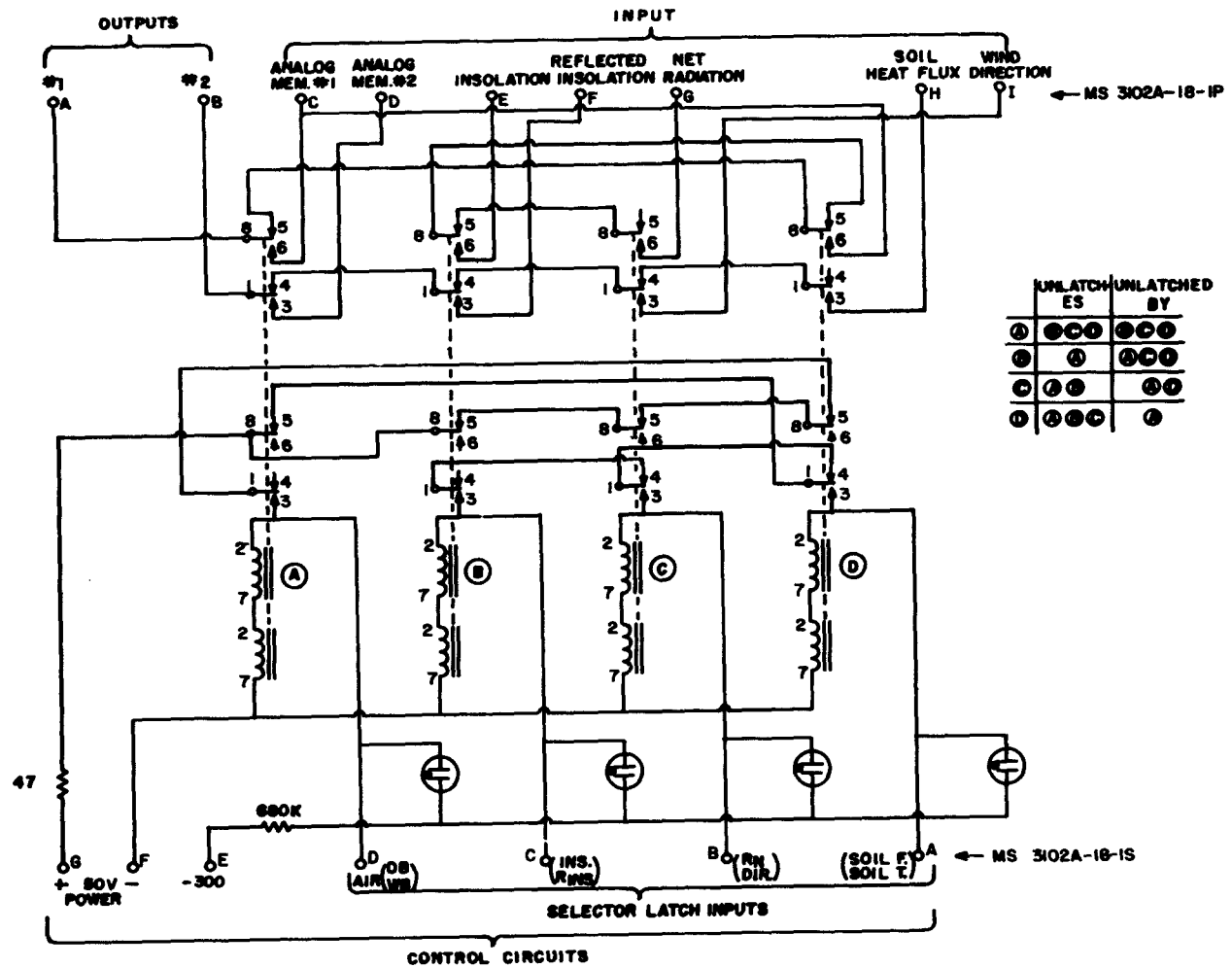

DATA SELECTOR

FIGURE 30

Table 14. Data Selector Cabling

Connector	Pin #	Function	Connects to
MS 3102A-18-1P Plug	A	Channel #1 Output	DVM Converter, Channel #1 Input Term.
	B	Channel #2 Output	DVM Converter, Channel #2 Input Term.
	C	Dry-bulb Temperature	Analog Memory B.T. #8
	D	Wet-bulb Temperature	Analog Memory B.T. #7
	E	Insolation	Red Term of Insolation Amplifier
	F	Reflected Insolation	Red Term of Reflected Insolation Amplifier
	G	Net Radiation	Red Term of Net Radiation Amplifier
	H	Soil Heat Flux	Red Term of Soil Heat Flux Amplifier
	I	Wind Direction	Red Term of Wind Direction Control Unit
	J	----	N.C.
MS 3102A-18-1S Socket	A	Select Soil	Main Programmer, Pin e
	B	Select Net Radiation	Same Pin L
	C	Select Insolation	Same Pin H
	D	Select Air	Same Pin F
	E	- 300V	Power Bus
	F	Relay Common	Power Bus
	G	+ 50V	Power Bus
	H	----	N.C.
	I	----	N.C.
	J	----	N.C.

Following the initiation of the basic 5-min cycle, the main programmer on step 3 sends a pulse to terminal D on the 10-pin socket thus energizing A-1 and A-2. Pin 8 and pin 1 of the A-1 contacts are thus pulled down to make connection with pin 6 and pin 3 respectively. Inasmuch as the 50-v is permanently tied to pin 8, this means that the 50-v is removed from pin 5, thus unlatching the B, C and D pairs, if they have been latched, and feeding the 50-v through the arm and normally open contacts of B, C and D back to pin 1 and thus to pin 3 of A-1 which latches the A pair. The A-2 arms are now tied to pins 6 and 3, thus tying the analog memory outputs 1 and 2 to outputs 1 and 2 respectively of the data selector which feed to channel #1 and channel #2 of the DVM converter. This permits on instruction of the main programmer, for the digitizing and readout of the air temperatures and reference voltages. Following this

readout, a pulse is sent to terminal C on the 10-pin socket, thus energizing the B-1 and B-2 relays. Recalling that C and D were unlatched, this breaks the 50-v through the B-1 contacts, and A-1 and A-2 unlatch, and in so doing put 50-v to pin 3 of the B-1 contacts, thus latching the B relays. At the same time, the outputs of the data selector are removed from the analog memory outputs and placed on the outputs of the insolation and reflected insolation amplifiers, thus permitting readout of these signals, etc.

In order to further assist in the understanding of the operation of the data selector, a small table is provided on the right-hand side of the data selector schematic which shows the latching and unlatching scheme that is followed. For instance, energizing the A set unlatches the B, C and D sets and A is unlatched by latching of B, C or D, etc.

In essence, then, the function of the data selector is to select six inputs in four combinations of two as the two outputs of the selector, which are fed directly to channel #1 and channel #2 of the DVM converter. The four combinations of two inputs are as follow: dry- and wet-bulb temperature; insolation and reflected insolation; net radiation and wind direction; and soil temperature and soil heat flux. Neon Postlites are provided on the front of the data selector chassis to show which relay pair is latched at a given time.

The analog-to-digital converter (DVM) utilized with the readout system is a Non-Linear Systems Model M-24 with an accuracy of $\pm$.01% of the reading plus or minus one digit in the last place of the four-digit readout. The DVM has automatic ranging with full-scale ranges of $\pm$.9999, $\pm$9.999, $\pm$99.99, and $\pm$999.9 volts. In normal operation, however, for system readout the DVM is locked on the 99.99 range. The DVM has visual readout in the form of a light bank and also an electrical output (the absence of -27 v for one digit of each of the four decades) as well as the sign. In order to convert this electrical output to a form useful for driving the typewriter and punch it was necessary to construct a DVM converter to accept these digit-voltage indications and convert them to relay closures. Figures 31a and 31b show this converter which utilizes mercury-wetted relays.

Referring to Fig. 31a, the two-deck, single-pole, six-position switch is used to select: NORMAL, which means the normal operation employed in the basic 5-min cycle (with the 99.99-v range locked in the DVM); EXTERNAL INPUT, which permits automatic ranging on the DVM and is used primarily for trouble-shooting in that any potential in the system may be investigated by connecting the external input lead to the point in question: +300-v, -300-v and 50-v, to check the level of the supplies; and the SIGNAL GROUND position to check noise, which is usually the first sign of malfunction of the DVM.

As can be seen, the first deck of this switch is wired to a four-pin socket which from the cabling diagram shows that the arm

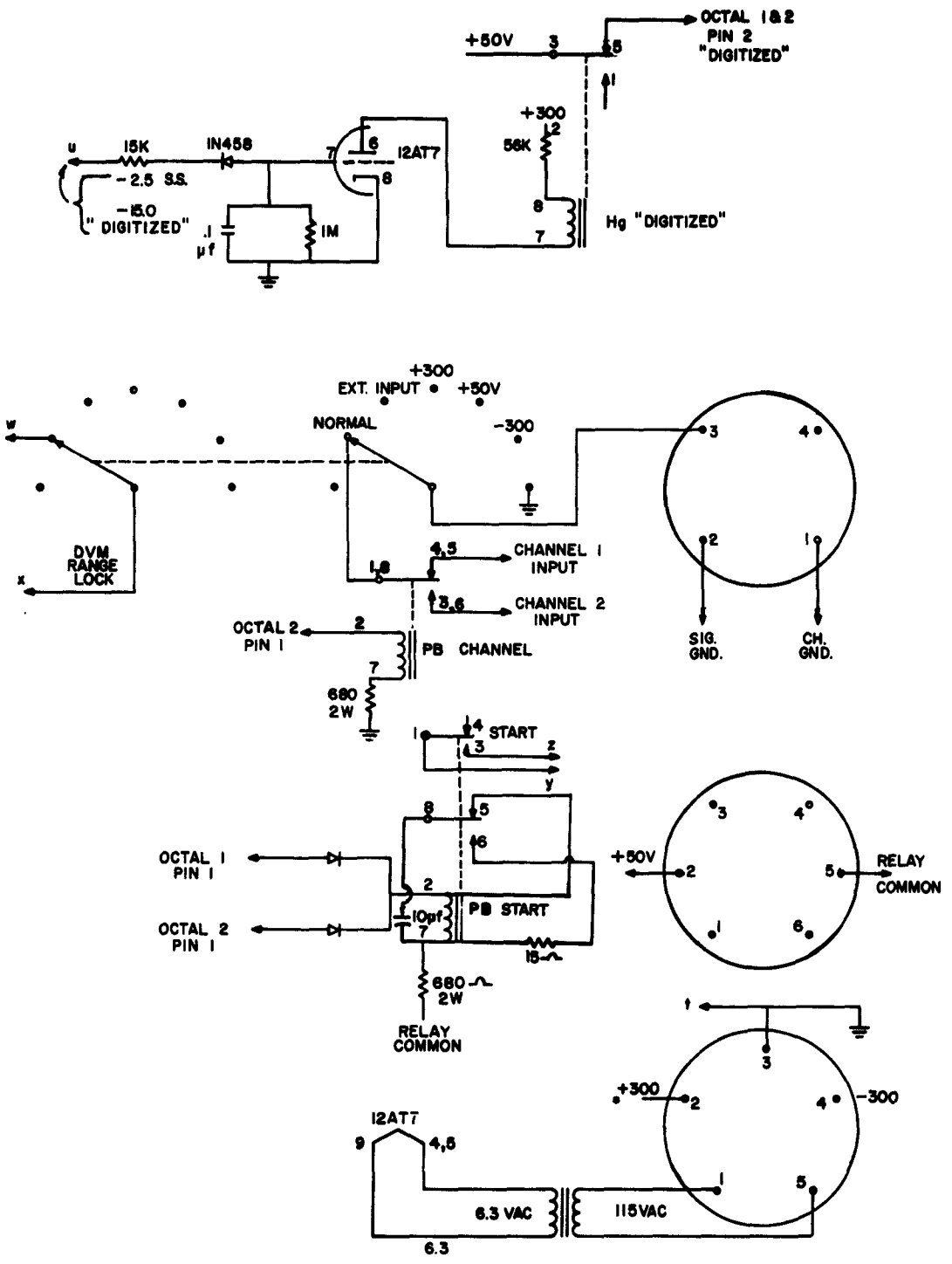

DVM CONVERTER

FIGURE 31a

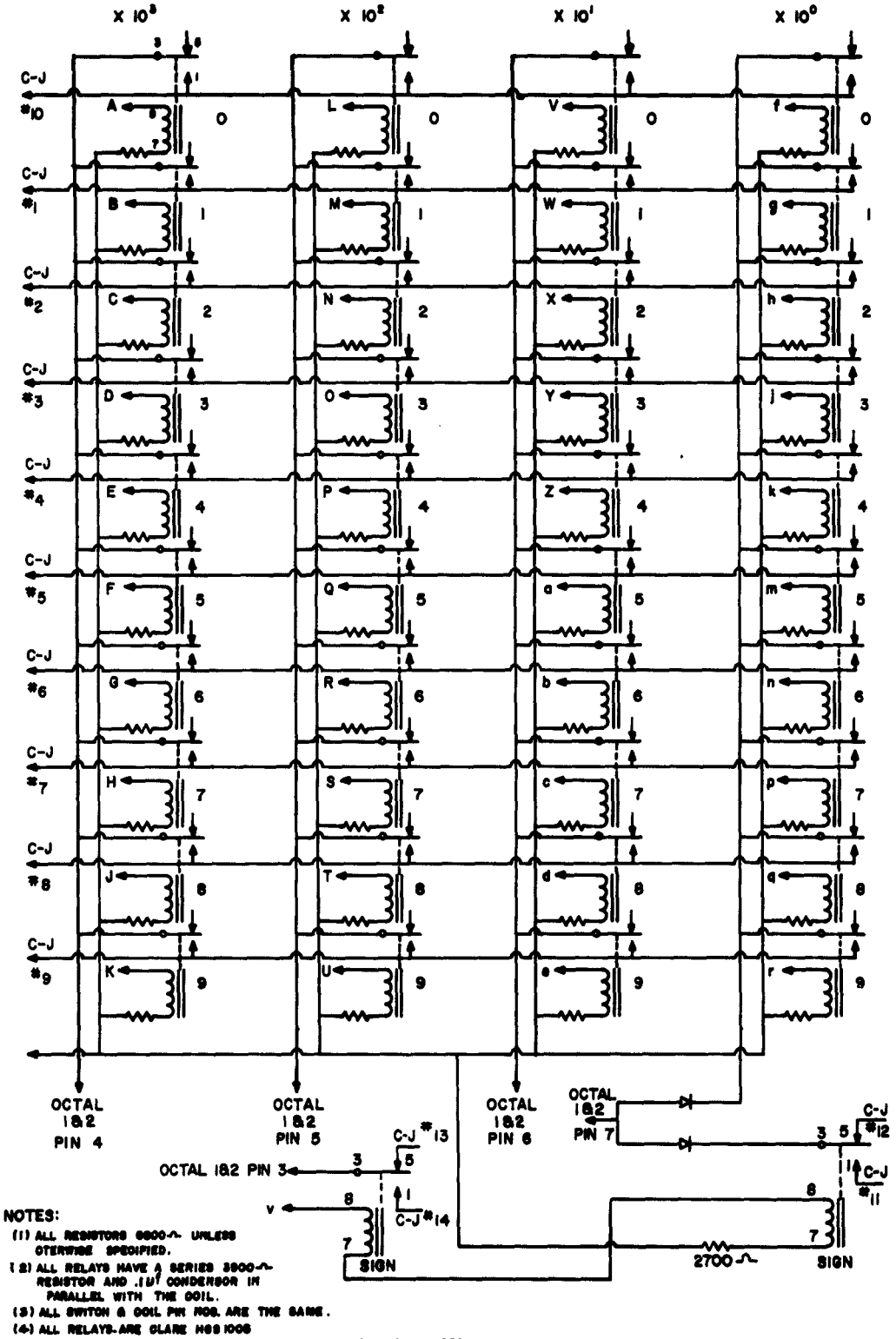

DVM CONVERTER
FIGURE 31b

of the switch is connected to the high side of the signal input to the DVM.

As noted in the discussion under the data selector, two parallel data channels are maintained, consequently it is necessary for the DVM to be time-shared. This is accomplished through use of the channel relay shown in Fig. 31a. Whenever a type #2 digitizer COMMAND is received from the program, this relay is pulled, thus removing channel #1 data from the voltmeter and substituting channel #2 data. The scan time of the DVM on either channel is 330 ms, whether in the normal (locked) mode or on continuous scan as is employed on all other positions on the DVM converter switch.

The conversion process is initiated by receipt of a type #1 or type #2 digitizer command from the main program which is fed to the DVM converter through octal 1, pin 1 or octal 2, pin 1. This command energizes the PB START relay which, as can be seen in Fig. 31a, is delayed on pull-in but not on break inasmuch as when the relay pulls in, the lower set of contacts are wired such that the charge on the capacitor is discharged through the 15-Ω resistor. Closure of this relay's upper contacts connects the points marked z and y, which (see Table 15) instructs the DVM to single scan. As noted previously, this same digitizer command, if digitizer #2, energized the PB CHANNEL relay such that the channel #2 input to the DVM was connected.

The ADVANCE condition of the main programmer following a command to type digitizer is either #1 DIGITIZED or #2 DIGITIZED, as applicable, which is furnished by the DVM converter to the typing subroutines, which will be discussed shortly. This ADVANCE signal is supplied to the typing subroutines through the 12AT7 and mercury relay circuitry shown at the top of Fig. 31a. Upon completion of the DVM conversion cycle, a digitized pulse from the DVM is fed to the point marked u, thus cutting the 12AT7 off and allowing the mercury relay to open, thus sending a 50-v pulse to furnish the digitized ADVANCE signal. This mercury relay is normally in an energized state due to the fact that the bias on the 12AT7 is, in steady state, about -2.5 v whereas upon receipt of the digitized pulse the bias swings to -15 v, cutting the tube off.

The SIGN relays (Fig. 31b) derive their input (terminal v) from the DVM. The pulse is zero volts if the sign is minus and -27 v if the sign is plus. Thus, upon receipt of a command from the typing subroutines to type sign (received on octals 1 and 2, pin 3), a 50-v pulse is sent to pin 14 of the Cinch Jones connector, if the sign is minus, and to pin 13 if the sign is plus. As indicated earlier, the pulse to the typewriter is interpreted as a space for a plus sign and as a hyphen for a minus sign.

Pins 4, 5, 6 and 7 on octal plugs 1 and 2 furnish the commands from the typing subroutine to type and punch the digit for

Table 15. DVM Converter Cabling

Connector	Pin #	Function	Connects to
Amphenol #86-PM8 Plug #1	1	Type Digitizer #1	Main Programmer, Pin S
	2	Dig. #1 Digitized?	Typing Subroutine, Pin Z
	3	Type Dig. #1 Sign	Same Pin e
	4	Same 10^3 Digit	Same Pin b
	5	Same 10^2 Digit	Same Pin X
	6	Same 10^1 Digit	Same Pin d
	7	Same 10^0 Digit	Same Pin W
	8	Not Used	Same Pin a
Amphenol #86-PM8 Plug #2	1	Type Digitizer #2	Main Programmer, Pin P
	2	Dig. #2 Digitized?	Typing Subroutine, Pin m
	3	Type Dig. #2 Sign	Same Pin f
	4	Same 10^3 Digit	Same Pin h
	5	Same 10^2 Digit	Same Pin p
	6	Same 10^1 Digit	Same Pin g
	7	Same 10^0 Digit	Same Pin n
	8	Not Used	Same Pin j
Input Binding Posts	1	Channel #1 Input	Data Selector 10-Pin Plug, Pin A
	2	Channel #2 Input	Data Selector 10-Pin Plug, Pin B
	3	Chassis Ground	Shield of Input Cables
Cinch Jones P-315-DB Plug	1	Type and Punch 1	Typewriter Punch Junction Box 15-Pin, Pin 1
	2	Same	Same Pin 2
	3	Same	Same Pin 3
	4	Same	Same Pin 4
	5	Same	Same Pin 5
	6	Same	Same Pin 6
	7	Same	Same Pin 7
	8	Same	Same Pin 8
	9	Same	Same Pin 9
	10	Same	Same Pin 10
	11	Punch (-) Sign	Same Pin 11
	12	Punch (+) Sign	Same Pin 12
	13	Type (+) Sign (Space)	Same Pin 13
	14	Type (-) Sign (Hyphen)	Same Pin 14
	15	Tabulate	Same Pin 15
Amphenol #78-PF4 Socket	1	Chassis Ground	NLS J-1, Pin C
	2	Signal Ground	NLS J-1, Pin B
	3	Signal	NLS J-1, Pin A
	4		N.C.

Table 15. DVM Converter Cabling (Continued)

Connector	Pin #	Function			Connects to
	A	Readout 10^3 Decade (Left-Most)		Digit 0	NLS J-9, Pin 8
	B	Same		Digit 1	Same Pin 15
	C	Same		Digit 2	Same Pin 22
	D	Same		Digit 3	Same Pin 28
	E	Same		Digit 4	Same Pin 34
	F	Same		Digit 5	Same Pin 40
	G	Same		Digit 6	Same Pin 46
	H	Same		Digit 7	Same Pin 52
	J	Same		Digit 8	Same Pin 58
	K	Same		Digit 9	Same Pin 65
	L	Readout 10^2 Decade	Digit 0		Same Pin 13
	M	Same	Digit 1		Same Pin 20
	N	Same	Digit 2		Same Pin 26
	O	Same	Digit 3		Same Pin 32
	P	Same	Digit 4		Same Pin 38
	Q	Same	Digit 5		Same Pin 44
	R	Same	Digit 6		Same Pin 50
	S	Same	Digit 7		Same Pin 56
	T	Same	Digit 8		Same Pin 63
	U	Same	Digit 9		Same Pin 71
	V	Readout 10^1 Decade	Digit 0		Same Pin 10
MS 3102A-	W	Same	Digit 1		Same Pin 16
36-10P	X	Same	Digit 2		Same Pin 23
Plug	Y	Same	Digit 3		Same Pin 29
	Z	Same	Digit 4		Same Pin 35
	a	Same	Digit 5		Same Pin 41
	b	Same	Digit 6		Same Pin 47
	c	Same	Digit 7		Same Pin 53
	d	Same	Digit 8		Same Pin 59
	e	Same	Digit 9		Same Pin 66
	f	Readout 10^0 Decade	Digit 0		Same Pin 14
	g	Same	Digit 1		Same Pin 21
	h	Same	Digit 2		Same Pin 27
	j	Same	Digit 3		Same Pin 33
	k	Same	Digit 4		Same Pin 39
	m	Same	Digit 5		Same Pin 45
	n	Same	Digit 6		Same Pin 51
	p	Same	Digit 7		Same Pin 57
	q	Same	Digit 8		Same Pin 64
	r	Same	Digit 9		Same Pin 72
	s	-27v for Hg Relays			Same Pin 62
	t	Power Ground			Same Pin 4
	u	Digitized Pulse			Same Pin 49
	v	(-)			Same Pin 25
	w	Range Control			Same Pin 17
	x	Range Control			Same Pin 11
	y	Make Single Scan			NLS J-3, Pin AA
	z	Make Single Scan			Same Pin CC

the thousands' place, the hundreds' place, the tens' place and the units' place, respectively, as can be seen in Table 15. As to what digit will be typed and punched, consider the thousands' place, or x 10^3 decade, in which the digit 4, for example, has been digitized. An input of -27 v (pin s) is already present on the common side of all relays, and in the 10^3 decade all relay coil points excepting E, which will be at zero volts, will have -27 v on them. Thus on command from the typing subroutine (received on octal 1 or 2, pin 4) only the #4 relay will be energized, sending the 50-v pulse on to Cinch Jones terminal 4, which results in a 4 being typed and punched as the first digit of the data word.

The typing subroutines are shown schematically in Fig. 32a, b and c. There are, however, four typing subroutines, with Fig. 32b applicable for both digitizer #1 and digitizer #2 subroutines.

In order to understand the operation of the typing subroutines, a complete sequence of the clock typing subroutine will be shown as an example. Necessary references will be Table 10, Table 16a, and Fig. 32a. In Table 10, the first ADVANCE condition is the (0, 1, 2, 3 MOD 5) MIN pulse which occurs simultaneously with the (0 MOD 5) SEC pulse and the (0 MOD 5)" SEC pulse, the latter being the absence of 50 v for a period of 1.3 sec. Consequently, looking at step 3 in Table 10 where the ADVANCE condition is the (0 MOD 5)" SEC pulse, it can be seen that the command to type clock occurred 1.3 sec after the basic 5-min cycle began. Since the ADVANCE for step 4 is a (0 MOD 5) SEC pulse (the second of these pulses to be issued from the timer), the "type clock" COMMAND will be in effect for a period of 3.7 sec, through the step 4 COMMAND hub of the air program sequence. This command (50-v pulse) is delivered to the entry of the clock typing subroutine, which (see Fig. 32a) means that the clock typing subroutine entry relay will be energized for a period of 3.7 sec, thus inactivating the OFF NORMAL circuitry to the stepping-switch and delivering 50-v through pin 5 of the mercury relay to the wiper on the COMMAND deck. Checking Table 16a, the first COMMAND step is to type the first digit. This means that a 50-v signal is passed through COMMAND hub 1 to the clock and then to the punch junction box, typing the first digit of the clock which will be the first digit of the month, either 0 or 1. As the typewriter is pulsed and the key raises to type, the typewriter interlock which is normally closed will be broken, which in turn makes the system interlock PB3 of the punch junction box, thus providing the necessary ADVANCE for step 1 of the clock typing subroutine. The system interlock signal energizes the mercury relay which cocks the stepping-switch for advance to position #2 when the system interlock signal is removed. The COMMAND on this position is "type second digit" and the ADVANCE is again the system interlock, etc. After the eighth digit of the date and time group has been typed, the COMMAND of #9 position is TABULATE with the ADVANCE again being the system interlock, which through the action of the mercury relay moves the stepping-switch to position #10, at which point a 50-v CLOCK EXIT signal is given by virtue of the fact that the wiper on deck D has 50 v on it at

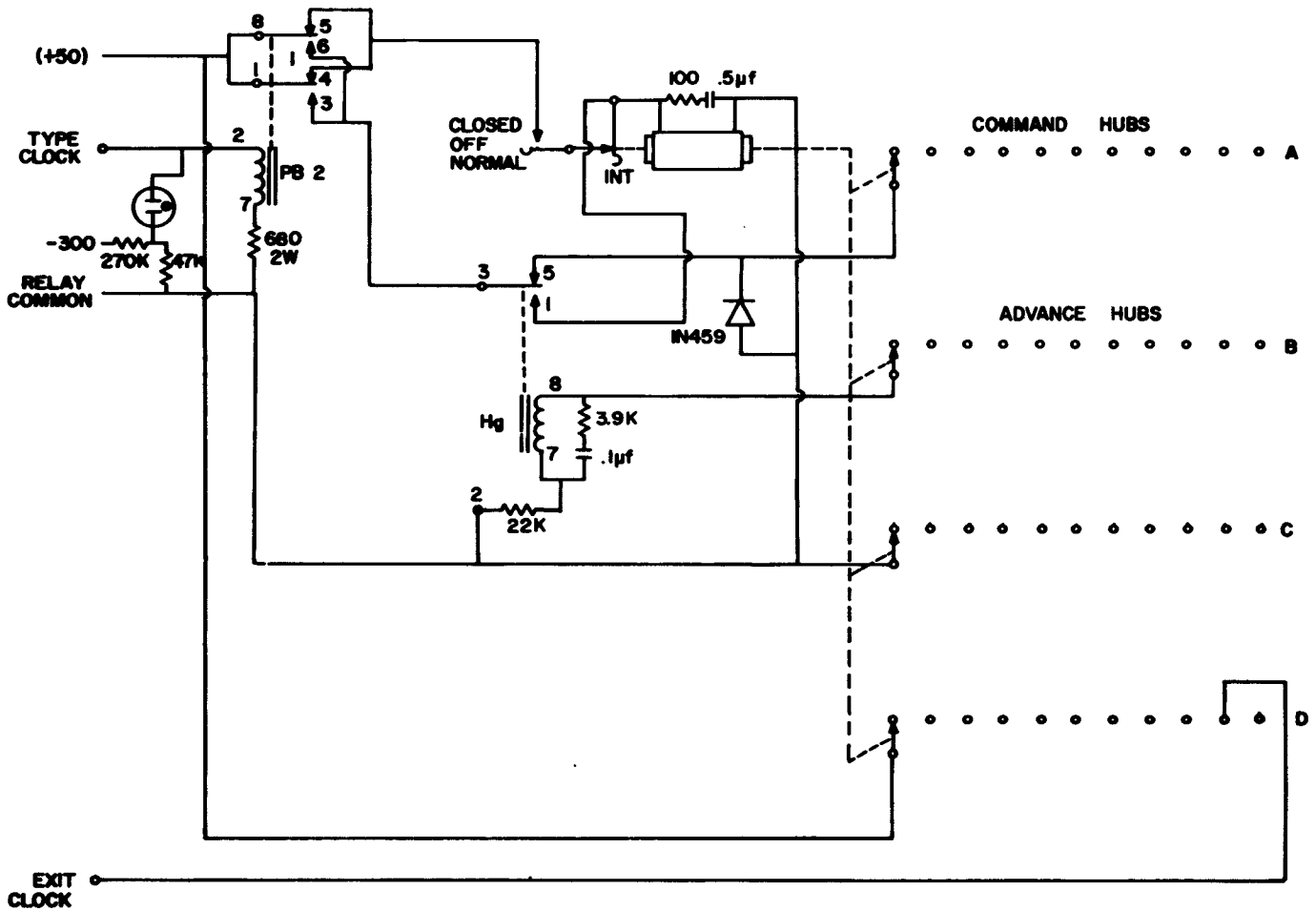

CLOCK TYPING SUBROUTINE

FIGURE 32a

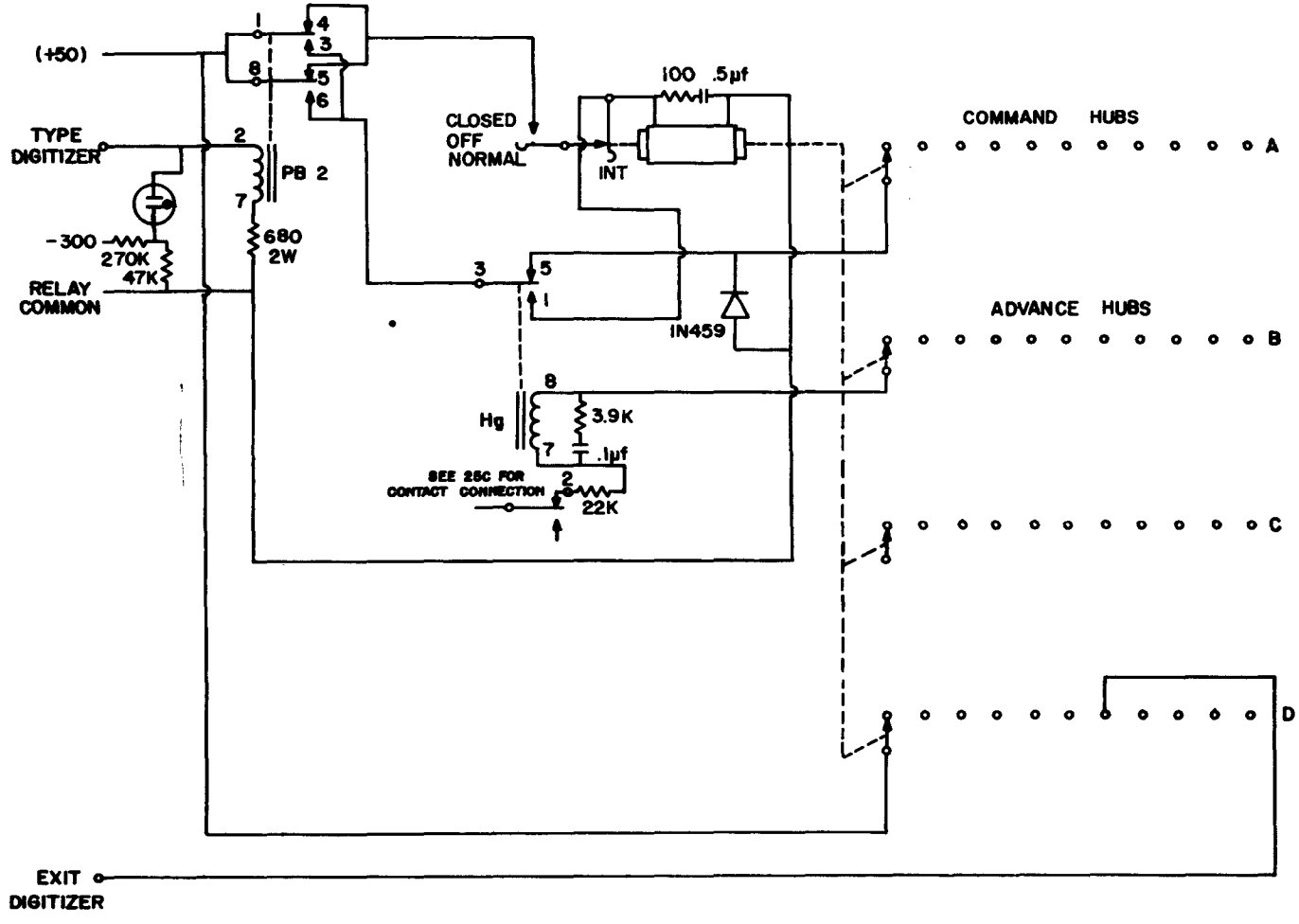

DIGITIZER TYPING SUBROUTINE

FIGURE 32 b

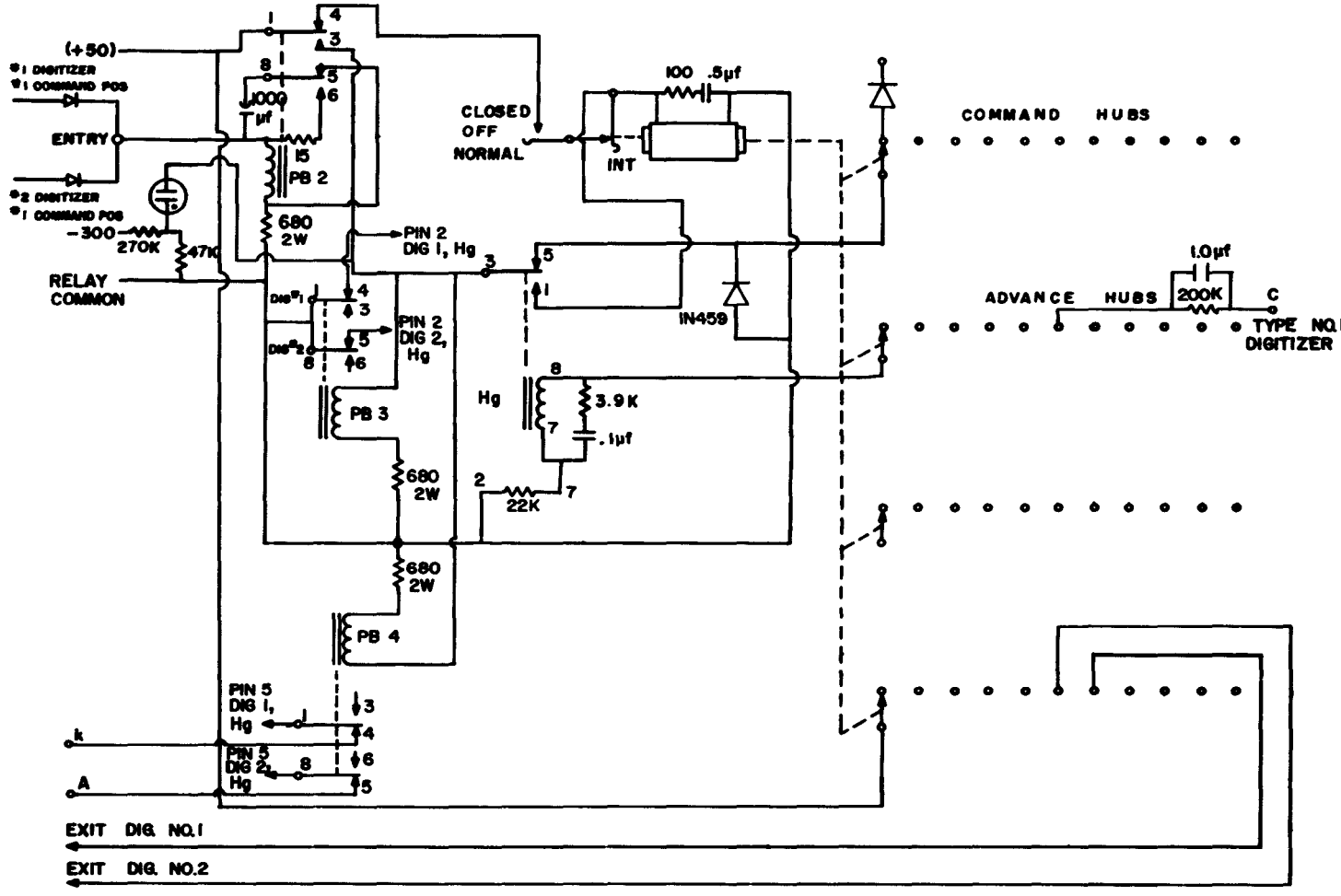

FAILURE TYPING SUBROUTINE

FIGURE 32c

Table 16a. Clock Typing Subroutine Sequence

Step #	Command	Advance Condition
1	Type 1st Digit	System Interlock
2	Type 2nd Digit	System Interlock
3	Type 3rd Digit	System Interlock
4	Type 4th Digit	System Interlock
5	Type 5th Digit	System Interlock
6	Type 6th Digit	System Interlock
7	Type 7th Digit	System Interlock
8	Type 8th Digit	System Interlock
9	Tabulate	System Interlock
10	(Exit)	
11	No-Op	

Table 16b. Digitizer Typing Subroutine Sequence

Step #	Command	Advance Condition
1	Failure Entry	Digitized (?)
2	Type Sign	System Interlock
3	Type 1st Digit	System Interlock
4	Type 2nd Digit	System Interlock
5	Type 3rd Digit	System Interlock
6	Type 4th Digit and Punch Sign	System Interlock
7	Exit	
8	No-Op	
9	No-Op	
10	No-Op	
11	No-Op	

Table 16c. Failure Typing Subroutine Sequence

Step #	Command	Advance Condition
1	Type Space	System Interlock
2	Type 9	System Interlock
3	Type 9	System Interlock
4	Type 9	System Interlock
5	Type 9	System Interlock
6	Exit #2	
7	Exit #1	
8	No-Op	
9	No-Op	
10	No-Op	
11	No-Op	

all times. From Table 10, however, it is seen that the ADVANCE condition for step 4 is not the CLOCK EXIT but the (0 MOD 5) SEC pulse. (The CLOCK EXIT pulse is delivered to the advance hub of step 23 in the soil program sequence; however, this sequence is inactive during the air sequence; consequently, the CLOCK EXIT pulse initiates no action at this time.)

Exactly similar logic controls the other subroutines except, in the case of the digitizer subroutines, the EXIT signal is the advance condition for the main programmer.

From Figure 32a it may be seen that following the removal of the entry to PB2 which lasted 3.7 sec, PB2 is de-energized, thereby applying 50-v through the OFF NORMAL contacts which then immediately returns the stepping-switch to the HOME position ready for the next "type clock" COMMAND which will occur at the beginning of the second minute.

The failure subroutine, Fig. 32c, is activated only in the event that the DIGITIZED signal normally appearing at the #1 hubs of the digitizer typing subroutine is not received within approximately 500 ms following the programmer command to type #1 digitizer or #2 digitizer, as the case might be. That is, the "type digitizer" command from the programmer is the entry to the digitizer subroutine (energizes the ENTRY relay) and also the entry to the DVM converter (energizes the START relay, and the CHANNEL relay if digitizer #2 command) and the DVM converter supplies the DIGITIZED signal as an ADVANCE on step 1 (see Table 16b). If this signal is not received within 500 ms, the step 1 COMMAND of the digitizer subroutine energizes the ENTRY relay on the failure subroutine and activates the sequence shown in Table 16c and discussed below. The 500 ms delay is a result of the 1000 mfd capacitor across the coil of the failure entry relay. Of course, if this relay were not considerably delayed, the failure routine would be activated even though the digitizer typing subroutine was capable of normal operation. With this delay, however, and the appearance of the DIGITIZED signal at the #1 ADVANCE position on the digitizer typing subroutine, the stepping-switch is moved to position #2, thereby removing the entry to the failure routine. If the DIGITIZED signal is not received, of course, then PB2 of the entry relay on the failure typing subroutine is activated following the delay and the failure typing subroutine goes through its sequence, which is to type 9999 without a sign.

Note that in Table 16c a unique ADVANCE command is employed on step 6 of the failure sequence; that is, "type #1 digitizer through a capacitor." This is required to permit the failure stepping-switch to go past position 6, which it could not do if a direct connection were employed as the type #1 digitizer pulse is held active by the main programmer until a digitizer #1 EXIT is received. Note, also, that as in the case of the main programmers and the other typing subroutines, the EXIT signals are not given for a COMMAND hub but from

an alternate deck where a direct connection to the 50-v supply is available.

The objectives of including a failure typing subroutine are many but the primary purpose is to permit the program to continue even if one or both of the digitizer typing subroutines should fail. If only one should fail, the data readout through the other digitizer would continue to be collected and even if both digitizer typing subroutines (or the DVM) should fail, the wind speeds would still be obtained during the fifth minute, since a separate wind typer subroutine contained within the wind-speed control chassis handles the output of the wind counters instead of a digitizer typing subroutine.

A secondary objective of the failure subroutine which will be obtainable early in 1963, through use of an AC amplifier on the DVM input and appropriate circuitry, will be to activate the failure routine at any time that excess noise should be present on the output of any of the measuring systems due to malfunction.

Figure 33 illustrates the wind-speed control unit chassis containing the eight wind speed counters and the typing subroutine for delivering the digital contents of the counters to the typewriter and tape punch. The counter impulses come in on the 11-pin plug which is connected to the wind speed conversion chassis previously discussed. The counters are turned on by the (0 MOD 5) MIN pulse of the timer at the beginning of the basic 5-min cycle and are turned off by the (4 MOD 5) MIN + RESET* pulse from the timer.

The TURN ON pulse coming in on pin 5 of the octal plug energizes PB5 and PB6, which latches both relays and connects pins 10 and 11 of the 11-pin socket together, thus applying the B+ voltage to the counters, the wind speed electronics channels, and the 7/11 converters which permits them to operate.

The TURN OFF pulse (4 MOD 5) MIN unlatches PB6 and PB5 thus turning the counters off and sending a pulse back through pin 6 of the octal plug which, as noted earlier in the discussion on wind speed measurements, energizes PB2 of Fig. 21 to de-activate the 7/11 converters.

Upon receipt of the TYPE WIND command from the main programmer which is received on pin 1 of the octal plug of Fig. 33, PB3 is energized; 50-v is put on the arms of PB2; HG2 is energized, and 50-v is put on the arms of HG2 which advances the stepping-switch to position #2 and then to position #3. At this point HG2 releases;

---

*That is, the counters are stopped by the (4 MOD 5) MIN pulse but the connection between pin 6 of the octal plug and the timer is such that RESET pulse comes in on pin 6 also.

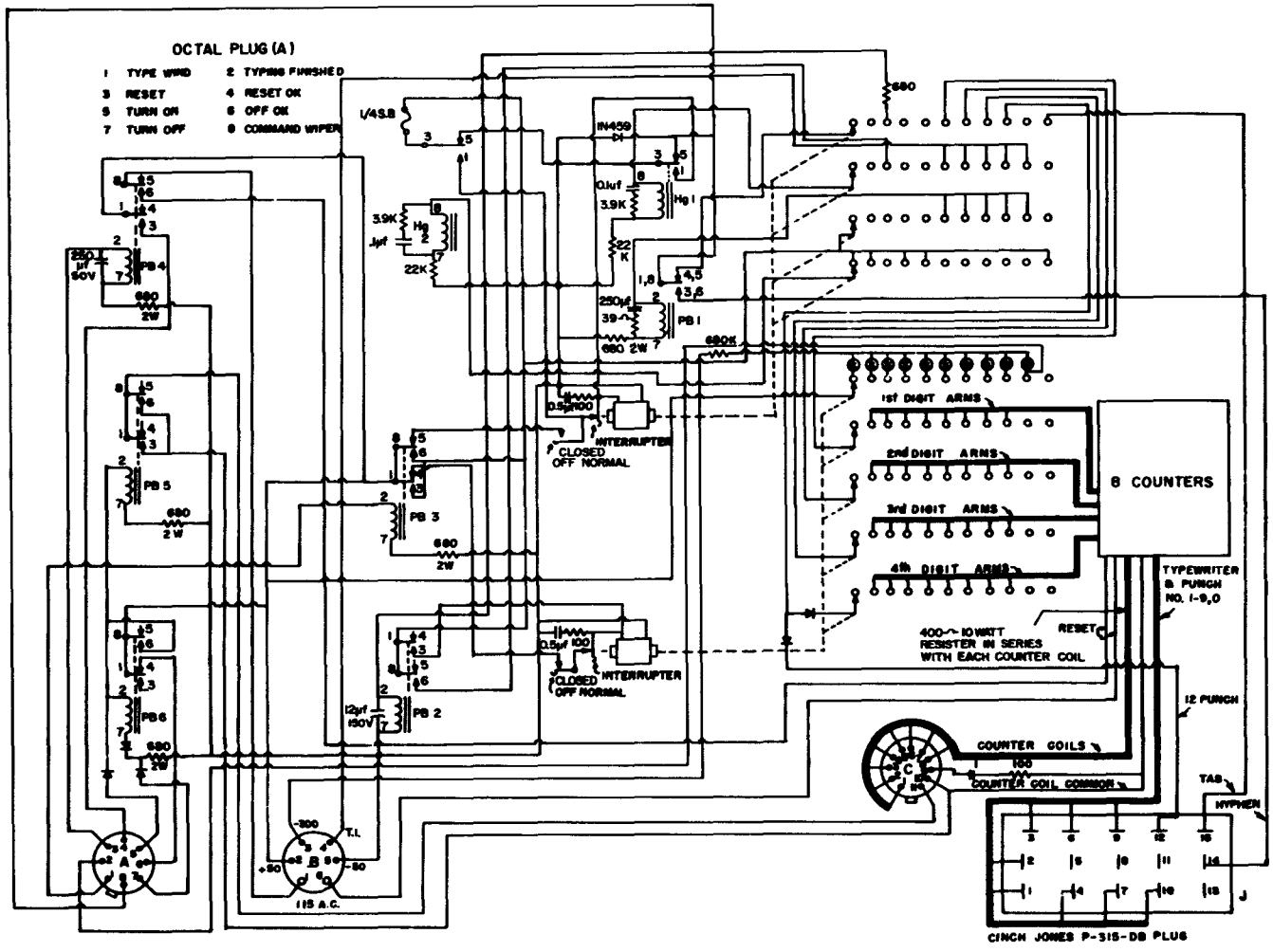

WIND SPEED CONTROL UNIT

FIGURE 33

PB2 (after delay) is energized through the wiper on the command deck and the normally closed contacts of HG1, and the counter selector stepping-switch is cocked for advance to position #2. As soon as PB2 is energized, HG1 is energized, which releases PB2, and after its delay expires the selector stepping-switch advances to position #2—readying it for a subsequent command to read out the contents of the 1/4-m counter. At the same time the subroutine stepping-switch is cocked for advance to position #4, PB2 (delayed) releases HC1 which allows the subroutine stepping-switch to advance to position #4, then positions #5 and #6. From reference to Table 18 it can be seen that this discussion has been nothing more than a step-by-step explanation of the wind typer sequence.

Following the readout of the first, second, third and fourth digits of the #1 counter, the tabulate command is given by the system interlock providing the advance pulse to HG1 at position 11, HG2 is again energized which advances the subroutine stepping-switch to the #1 position and the procedure is repeated for the second, third, . . . through the eighth counter.

Following the readout of the eighth (32-m) counter, the selector stepping-switch moves to position #10 whose upper light deck position transmits 50-v back to octal pin 2 which is returned to the main programmer as the ADVANCE command WIND TYPED (and punched) for the next step (step 24).

The purpose of the third or error deck in the wind typer subroutine is to provide in conjunction with PB1 an error indication in the event of a counter failure. In the past considerable difficulty has been experienced with the Neuron (Model #7005D90AS) counter, particularly so in failure to readout a given decade and when such failure occurs, the program will stop at that point unless an error signal is generated thus providing a proper ADVANCE.

This error signal, which consists of a hyphen, is achieved in the following manner. As can be seen from Fig. 33, the wiper of the error deck has 50-v on it at all times while the TYPE WIND command is present. Consequently, when the subroutine stepping-switch has moved over to any type command position, 50-v is applied to PB1 which will be energized after approximately 75 to 100 ms due to the 250 mfd capacitor and 39-Ω resistor across the coil. If in this period the system interlock signal is not received as an ADVANCE, PB1 will be energized and a hyphen will be sent to the typewriter only through pin 14 of the Cinch Jones plug. (Typing the hyphen then provides the system interlock ADVANCE.)

Another useful purpose achieved by this error signal is that quite often wind data can be saved inasmuch as the usual failure on the counters will be for a particular digit in a decade not to print out and an examination of the record over a few hours in which a given decade has failed in this manner will reveal the missing digit

Table 17. Typing Subroutines Cabling

Connector	Pin #	Function	Connects to
	A	Failure PB1 Pin 5 for Punch Interlock	Typewriter Punch Junction Box 26-Pin Socket, Pin P
	B	Exit Digitizer #1	Main Programmer, Pin V
	C	Type Digitizer #1	Main Programmer, Pin S
	D	Tabulate after Clock Typing	Typewriter Punch Junction Box 10-Pin, Pin A
	E	Type Space from Failure	Typewriter Punch Junction Box 10-Pin, Pin J
	F	Exit Digitizer #2	Main Programmer, Pin C
	G	Type Digitizer #2	Main Programmer, Pin P
	H	Exit Clock	Main Programmer, Pin M
	J	Type 9 from Failure	Typewriter Punch Junction Box 15-Pin, Pin 9
	K	Type Clock	Main Programmer, Pin f
	L	Failure Command Wiper for Punch Interlock	Typewriter Punch Junction Box 26-Pin Socket, Pin M
	M	Type Hour Digit 2	Clock Octal, Pin 6
	N	Type Day Digit 1	Same Pin 3
	P	Type Day Digit 2	Same Pin 4
MS 3102A-	R	Type Month Digit 1	Same Pin 1
28-21S	S	Type Minute Digit 2	Same Pin 8
Socket	T	Type Hour Digit 1	Same Pin 5
	U	Type Month Digit 2	Same Pin 2
	V	Type Minute Digit 1	Same Pin 7
	W	Type Dig. #1 10^0 Digit	DVM Converter Octal 1, Pin 7
	X	Type Dig. #1 10^2 Digit	Same Octal 1, Pin 5
	Z	Dig. #1 Digitized?	Same Octal 1, Pin 2
	a	Not Used	Same Octal 1, Pin 8
	b	Type Dig. #1 10^3 Digit	Same Octal 1, Pin 4
	c	Clock Command Wiper for Punch Interlock	Typewriter Punch Junction Box 26-Pin Socket, Pin N
	d	Type Dig. #1 10^1 Digit	DVM Converter Octal 1, Pin 6
	e	Type Dig. #1 Sign	Same Octal 1, Pin 3
	f	Type Dig. #2 Sign	Same Octal 2, Pin 3
	g	Type Dig. #2 10^1 Digit	Same Octal 2, Pin 6
	h	Type Dig. #2 10^3 Digit	Same Octal 2, Pin 4
	j	Not Used	Same Octal 2, Pin 8
	k	Failure PB1 Pin 4 for Punch Interlock	Typewriter Punch Junction Box 26-Pin Socket, Pin R
	m	Dig. #2 Digitized?	DVM Converter Octal 2, Pin 2
	n	Type Dig. #2 10^0 Digit	Same Octal 2, Pin 7
	p	Type Dig. #2 10^2 Digit	Same Octal 2, Pin 5
	r		N.C.
	s		N.C.

Table 18. Wind Typer Sequence

Step #	Command	Advance Condition
1	No-Op	Unconditional ADV 2
2	No-Op	Unconditional ADV 2
3	Advance Selector	Selector Advanced ADV 1
4	No-Op	Unconditional ADV 2
5	No-Op	Unconditional ADV 2
6	Type 1st Digit	System Interlock ADV 1
7	Type 2nd Digit	System Interlock ADV 1
8	Type 3rd Digit	System Interlock ADV 1
9	Type 4th Digit and Punch Sign	System Interlock ADV 1
10	Tabulate	System Interlock ADV 1
11	No-Op	Unconditional ADV 2

which can be supplied manually in the processing, thus saving the wind speed word at that point.

Figure 34 is the schematic drawing of the typewriter punch junction box which contains typewriter control circuitry, typewriter and tape punch impulse and insolation networks, the system interlock circuits, as well as the power monitoring meters. All typewriter and punch commands from the clock, DVM converter, wind speed control unit, and typing subroutines are accepted by the typewriter punch junction box which directs these commands to either or both of the readout devices as required. Relays PB1, PB2 and PB3 control all of the timing functions for the typewriter, punch, and system interlock for the entire system. In effect they are the timing controls of the entire system rather than the typewriter and/or the tape punch.

The operation of these relays is as follows: PB2 converts the normally closed typewriter interlock signal to the normally open system interlock which is used for controlling the typing subroutines. The typewriter interlock signal coming in on pin L energizes PB2 (typewriter switch closed), thus breaking the system interlock. As the typing command is executed the typewriter interlock opens, then closes again, which allows PB2 to become de-energized, then re-energized, thus providing the system interlock pulse which serves as the ADVANCE command of the subroutines. PB2 is wired such that it has a delay on pull-in but no delay on break in order to insure that the stepping-switches in the subroutine have time to energize (stepping-switch cocked) during the typewriter space command.

If the typewriter switch is turned off, thus removing the typewriter from the system, program operation is still possible with or without the tape punch as relay PB2 is then energized by PB1 which duplicates the typewriter interlock operation with the punch

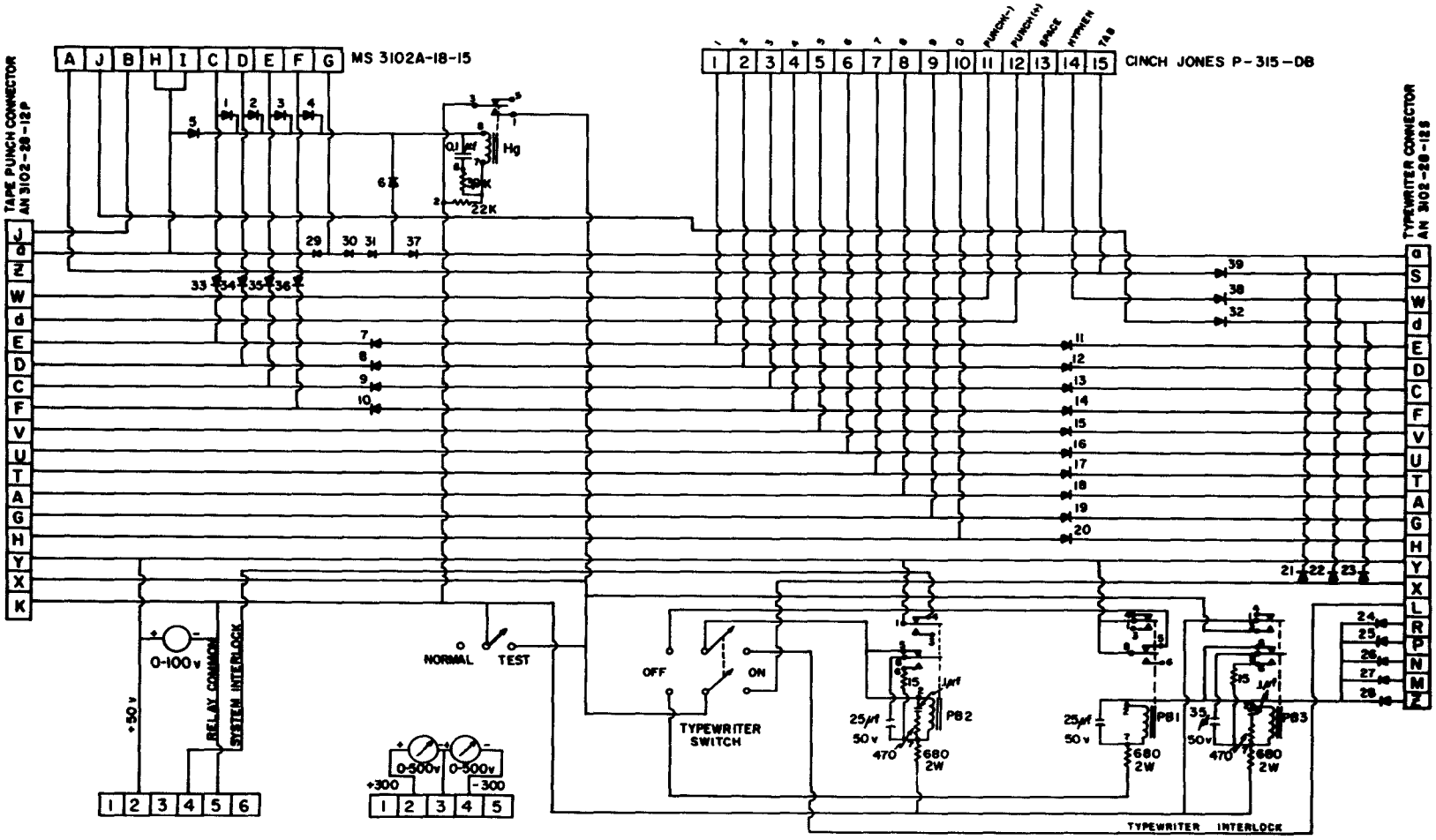

TYPEWRITER PUNCH JUNCTION BOX
FIGURE 34

interlock. PB1, delayed both on make and break, is energized through diodes 24, 25, 26, 27 or 28 which by reference to Table 20 shows the commands through these diodes come from the typing subroutines and the wind speed typer.

Relay PB3 is energized from the same points as PB1 and its function is to provide the common of the punch and the typewriter if the typewriter switch is on and the common of the punch and PB1 if the typewriter switch is off. This relay is wired for a delay on pull-in but not on break as was the case with PB2. The necessity for this delay is to insure that the subroutine stepping-switches (controlled by mercury relays) have adequate time to step to the next position following the previous typing command. HG1 (Fig. 34) serves the same function as PB3 except at a much faster operation rate. This particular relay accepts all type and punch commands not generated in the subroutines (release, card type, and carriage return).

A test switch is also provided on the chassis to connect the system interlock to relay (and solenoid) common, thus duplicating the function of PB3 which permits manual impulsing to the typewriter and/or punch for trouble shooting and maintenance tests.

Figure 35 shows the input converter for the Friden tape punch. Its function is to convert the 50-v ten-line decimal pulses to 50-v binary pulses for tape punch operation. The converter is wired to permit employment of all eight channels, but in normal system operation only tape channels 1, 2, 3, 4, 5, 7 and 8 are used with 1, 2, 3 and 4, for numeric storage (1, 2, 4, 8 code with odd parity), channel 5 as a parity punch, 7 as a minus sign, and 8 as a plus sign. The purpose of the Potter & Brumfield relay is to provide the proper timing for the punch such that only one punch cycle per code input can occur without regard to the length of the pulse received except that it must be at least 12 ms to insure proper punch operation.

Figure 36 shows the wiring schematic for the Friden tape punch and is taken from the Friden manual without modification except for showing the interaction of the various switches of the schematic.

In order to monitor the operation of the tape punch, the normal eight-column punch parity assembly has been modified for five-column parity such that if an even number of holes is punched in the first five tape columns during a given punch cycle a 50-v pulse will be sent to a Potter & Brumfield relay (Fig. 37) which energizes a stepping-switch and triggers a marker pen on an AC power chart (Esterline Angus Recorder Model AW) thus showing the time at which the punch error occurred and (through the light assembly tied to another deck of the stepping-switch) the number of such errors if ten or less.

An over-voltage protection circuit for the precision plus and minus 300-v power supply (Power Design Model D 305-CS, $\pm$.01%) is shown in Fig. 38. The function of this circuit is obviously to cut

Table 19. Wind-Speed Control Unit Cabling

Connector	Pin #	Function	Connects to
Amphenol #86-PM11 Plug	1	1/4-m Counter Pulse	Wind-Speed Conversion 11-Pin Socket, Pin 1
	2	1/2-m Same	Same Pin 2
	3	1-m Same	Same Pin 3
	4	2-m Same	Same Pin 4
	5	4-m Same	Same Pin 5
	6	8-m Same	Same Pin 6
	7	16-m Same	Same Pin 7
	8	32-m Same	Same Pin 8
	9	Wind-Speed Electronics, Power Ground	Same Pin 9
	10	Switched Power for 25L6 Screens	Same Pin 10
	11	Wind-Speed Electronics B+ Supply	Same Pin 11
Amphenol #78-PF8 Socket	1	Type Wind	Main Programmer, Pin W
	2	Wind Typed	Same Pin N
	3	Reset Counters	Same Pin a; Timer, Pin J
	4	Counter Reset O.K.	Same Pin Z; Wind Speed Conversion Octal, Pin 4
	5	Start Counters	Timer, Pin B
	6	Counters Off O.K.	Wind-Speed Conversion Octal, Pin 6
	7	Stop Counters	Timer, Pin C
	8	Wind Typer Command Arm for Punch Interlock	Typewriter Punch Junction Box 26-Pin Socket, Pin Z
Cinch Jones P-315-DB Plug	1	Type 1	Typewriter Punch Junction Box 15-Pin, Pin 1
	2	Type 2	Same Pin 2
	3	Type 3	Same Pin 3
	4	Type 4	Same Pin 4
	5	Type 5	Same Pin 5
	6	Type 6	Same Pin 6
	7	Type 7	Same Pin 7
	8	Type 8	Same Pin 8
	9	Type 9	Same Pin 9
	10	Type 0	Same Pin 10
	11	Punch (-)	Same Pin 11
	12	Punch (+)	Same Pin 12
	13	Type (+) Sign (Space)	Same Pin 13
	14	Type (-) Sign (Hyphen)	Same Pin 14
	15	Tabulate	Same Pin 15

Table 20. Typewriter Punch Junction Box Cabling

Connector	Pin #	Function	Connects to
	A	Tabulate	Typing Subroutine, Pin D
	B	Duplicate Date/Time	Main Programmer, Pin K
	C	Card Type #1	Same Pin E
	D	Card Type #2	Same Pin J
MS 3102A-	E	Card Type #3	Same Pin d
18-1S	F	Card Type #4	Same Pin A
Socket	G	Release and Carriage Return	Same Pin g
	H	Punch Release	Same Pin G
	I	Punch Release	Wind-Speed Conversion Octal, Pin 2
	J	Space	Typing Subroutines, Pin E
	1	Type and Punch 1	DVM Converter, Calendar Clock, and Wind-Speed Control Unit 15-Pin, Pin 1
	2	Same 2	Same Pin 2
	3	Same 3	Same Pin 3
	4	Same 4	Same Pin 4
	5	Same 5	Same Pin 5
	6	Same 6	Same Pin 6
Cinch	7	Same 7	Same Pin 7
Jones	8	Same 8	Same Pin 8
P-315-DB	9	Same 9	Same Pin 9; Typing Subroutines, Pin J
Plug	10	Same 0	DVM Converter, Calendar Clock, and Wind-Speed Control Unit 15-Pin, Pin 10
	11	Punch (-)	Same Pin 11
	12	Punch (+)	Same Pin 12
	13	Type (+) Sign (Space)	Same Pin 13
	14	Type (-) Sign (Hyphen)	Same Pin 14
	15	Tabulate	Same Pin 15
	E	Type 1	IBM Connector Pin T (36)
	D	Type 2	Same Pin M (14)
	C	Type 3	Same Pin L (13)
	F	Type 4	Same Pin K (12)
	V	Type 5	Same Pin J (11)
	U	Type 6	Same Pin H (10)
	T	Type 7	Same Pin G (9)
	A	Type 8	Same Pin F (8)
	G	Type 9	Same Pin E (7)
AN 3102A-	H	Type 0	Same Pin D (4)
28-12S	W	Type Hyphen	Same Pin B (2)
Socket	d	Type Space	Same Pin u (18)
	b	----	

Table 20. Typewriter Punch Junction Box Cabling (Continued)

Connector	Pin #	Function	Connects to
	S	Tabulate	IBM Connector Pin P (17)
	J	----	
	X	Solenoid Common	Same Pin A (1)
	Y	+50v	Same Pin R (21)
	a	Carriage Return	Same Pin N (15)
AN 3102A-	Z	----	
28-12S	L	Interlock	Same Pin S (24)
Socket	K	Period	Same Pin C (3)
(Con-	M	Failure Command Wiper for Punch Interlock	Typing Subroutines, Pin L
tinued)	N	Clock.Command Wiper for Punch Interlock	Same Pin c
	P	Failure PB1 Pin 5 for Punch Interlock	Same Pin A
	R	Failure PB1 Pin 4 for Punch Interlock	Same Pin k
	Z	Wind Typer Command Wiper for Punch Interlock	Wind-Speed Control Unit Octal, Pin 8
	E	Punch Digit 1	Input Converter for Friden Punch, Pin E
	D	Same 2	Same Pin D
	C	Same 3	Same Pin C
	F	Same 4	Same Pin F
	V	Same 5	Same Pin V
	U	Same 6	Same Pin U
	T	Same 7	Same Pin T
	A	Same 8	Same Pin A
AN 3102A-	G	Same 9	Same Pin G
28-12P	H	Same 0	Same Pin H
Plug	W	Punch (-) Sign	Same Pin W
	d	Punch (+) Sign	Same Pin d
	b	Punch Space	Same Pin b
	S	----	Same Pin S
	J	Auto	Same Pin J
	X	Punch Common	Same Pin X
	Y	+50v	Same Pin Y
	a	Release	Same Pin a
	Z	----	Same Pin Z
	L	----	Same Pin L
	K	Relay Common	Same Pin K

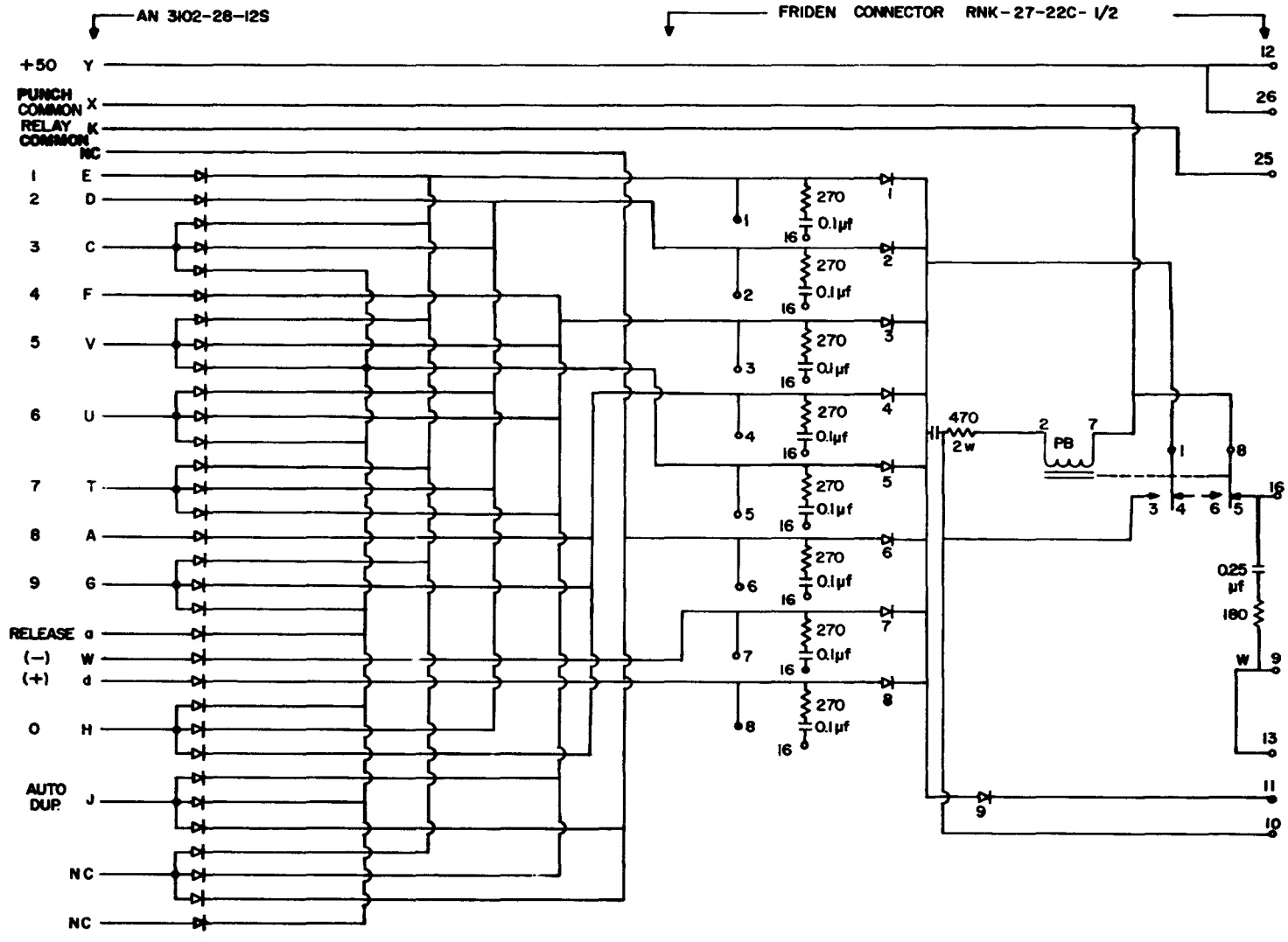

INPUT CONVERTER FOR FRIDEN PUNCH
FIGURE 35

Table 21. Input Converter for Friden Punch Cabling

Connector	Pin #	Function	Connects to
	E	Punch Digit 1	Typewriter Punch Junction Box 26-Pin Plug, Pin E
	D	Same 2	Same Pin D
	C	Same 3	Same Pin C
	F	Same 4	Same Pin F
	V	Same 5	Same Pin V
	U	Same 6	Same Pin U
	T	Same 7	Same Pin T
	A	Same 8	Same Pin A
	G	Same 9	Same Pin G
AN 3102A-28-12P Chassis Mount	H	Same 0	Same Pin H
	W	Punch (-) Sign	Same Pin W
	d	Punch (+) Sign	Same Pin d
	b	Punch Space	Same Pin b
	S	----	Same Pin S
	J	Auto Duplicate	Same Pin J
	X	Punch Common	Same Pin X
	Y	+50v	Same Pin Y
	a	Release	Same Pin a
	Z	----	Same Pin Z
	L	----	Same Pin L
	K	Relay Common	Same Pin K

Table 21. Input Converter for Friden Punch Cabling (Continued)

Connector	Pin #	Function	Connects to
	1	Code Magnet #1, (1)	Solenoid #1
	2	Code Magnet #2, (2)	Solenoid #2
	3	Code Magnet #3, (4)	Solenoid #3
	4	Code Magnet #4, (8)	Solenoid #4
	5	Code Magnet #5, Parity, Release	Solenoid #5
	6	Code Magnet #6, ---	Solenoid #6
	7	Code Magnet #7, (-)	Solenoid #7
	8	Code Magnet #8, (+)	Solenoid #8
	9	Clutch Magnet	Clutch Magnet Solenoid
	10	Punch Cycle Started	Punch Latch Contacts (Normally Open Side)
	11	Clutch Command	Power Switch (Normally Open Side)
	12	+50v	Tape Feed Switch (Arm Side #1)
RNK-27-22C-1/2	13	Interlocked Clutch Command Return	Punch Latch Contacts (Normally Closed Side)
	14		N.C.
	15		N.C.
	16	Punch Common	All Solenoids
	17		N.C.
	18		N.C.
	19		N.C.
	20		N.C.
	21		N.C.
	22		N.C.
	23		N.C.
	24		N.C.
	25	Relay Common	Tape Feed Switch (Arm Side #2); Punch Parity Error Indicator
	26	+50v	Punch Parity Error Indicator

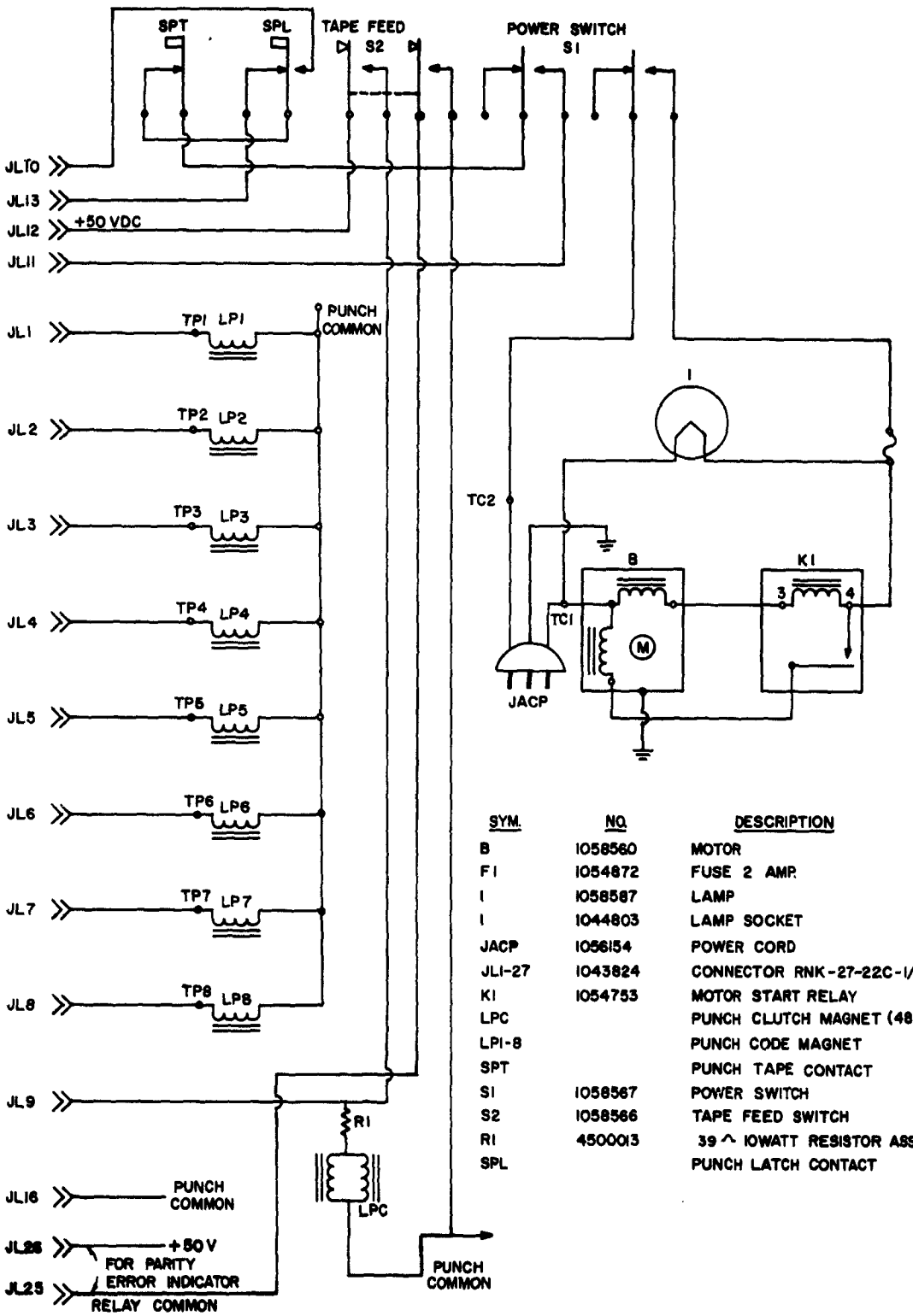

SYM.	NO.	DESCRIPTION
B	1058560	MOTOR
F1	1054872	FUSE 2 AMP.
I	1058587	LAMP
I	1044803	LAMP SOCKET
JACP	1056154	POWER CORD
JL1-27	1043824	CONNECTOR RNK-27-22C-1/2
K1	1054753	MOTOR START RELAY
LPC		PUNCH CLUTCH MAGNET (48V)
LPI-8		PUNCH CODE MAGNET
SPT		PUNCH TAPE CONTACT
S1	1058567	POWER SWITCH
S2	1058566	TAPE FEED SWITCH
R1	4500013	39 Ω 10WATT RESISTOR ASSEM.
SPL		PUNCH LATCH CONTACT

MOTORIZED TAPE PUNCH
WIRING SCHEMATIC
FIGURE 36

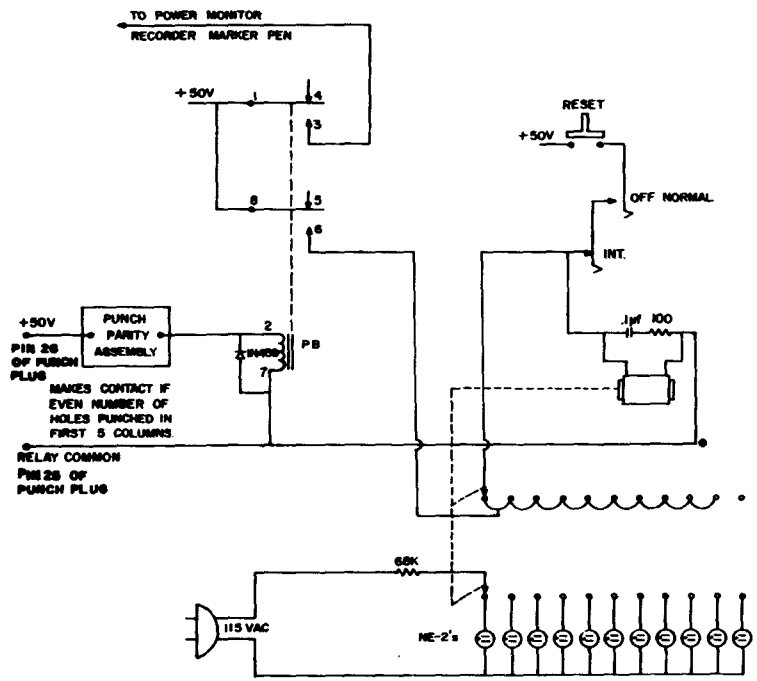

PUNCH PARITY ERROR INDICATOR
FIGURE 37

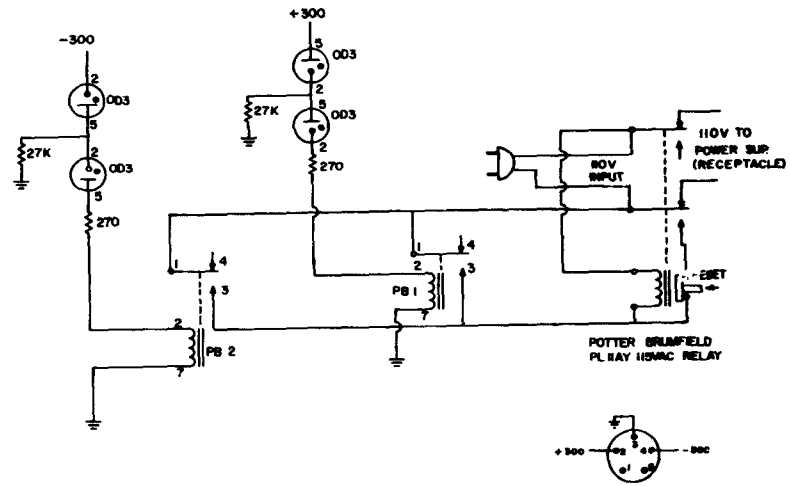

± 300V POWER SUPPLY OVER
VOLTAGE PROTECTION
FIGURE 38

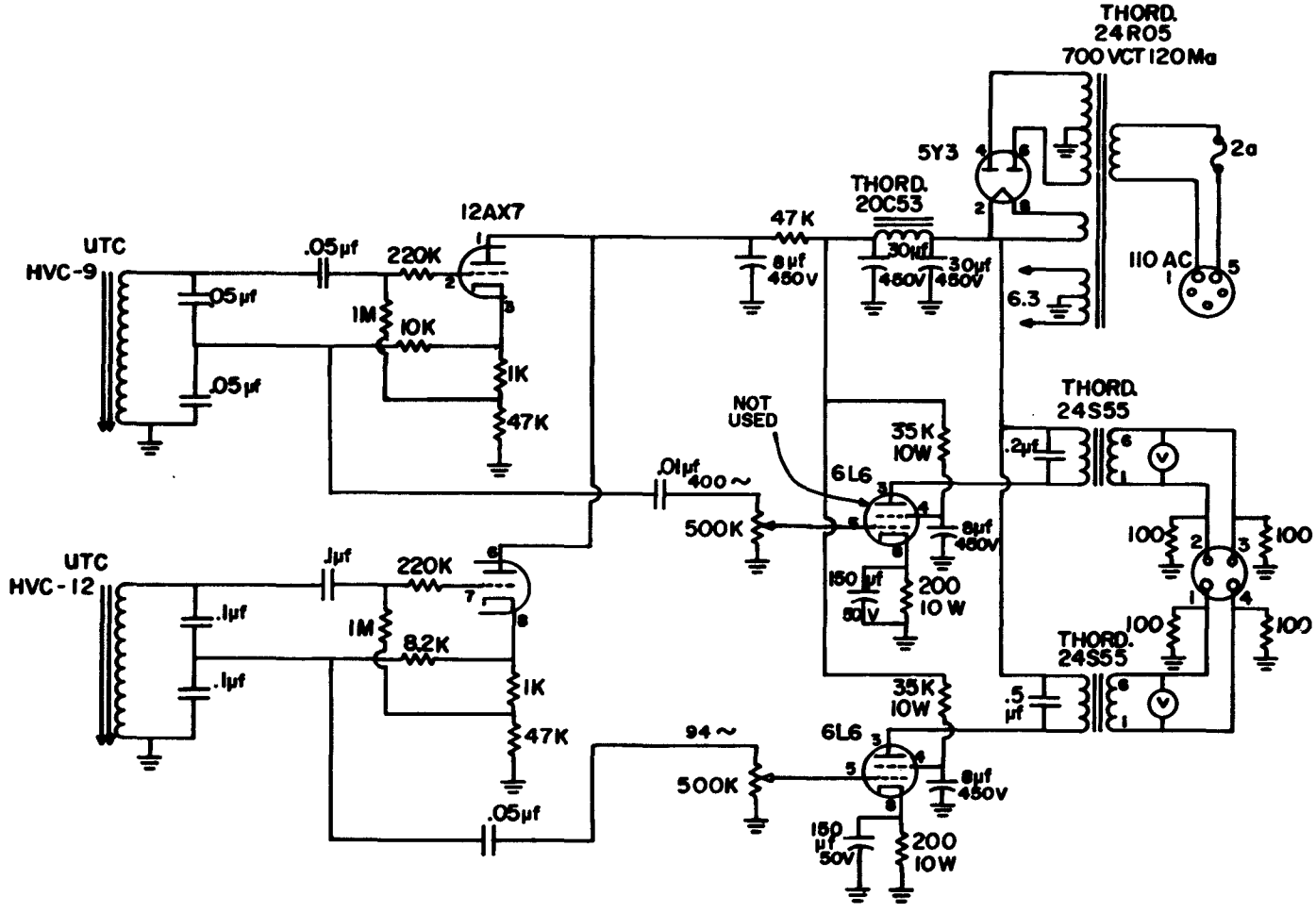

POWER OSCILLATOR

FIGURE 39

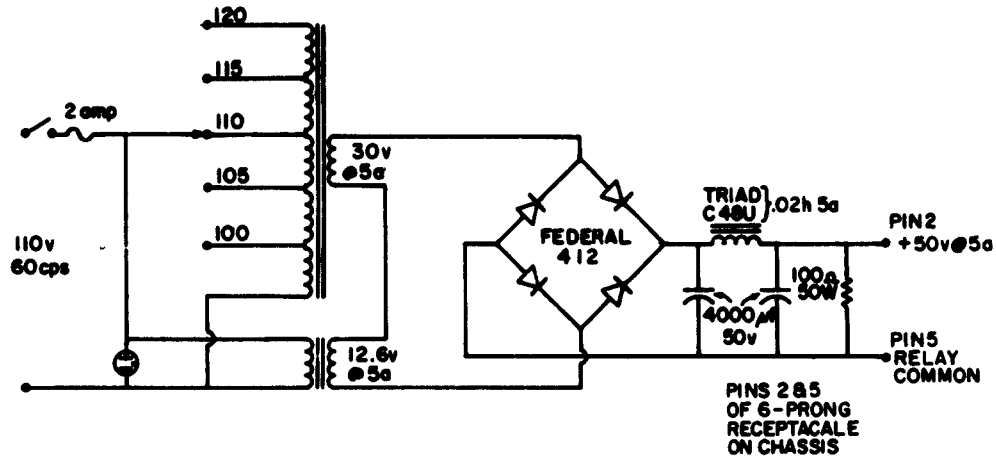

MAIN 50v POWER SUPPLY

FIGURE 40

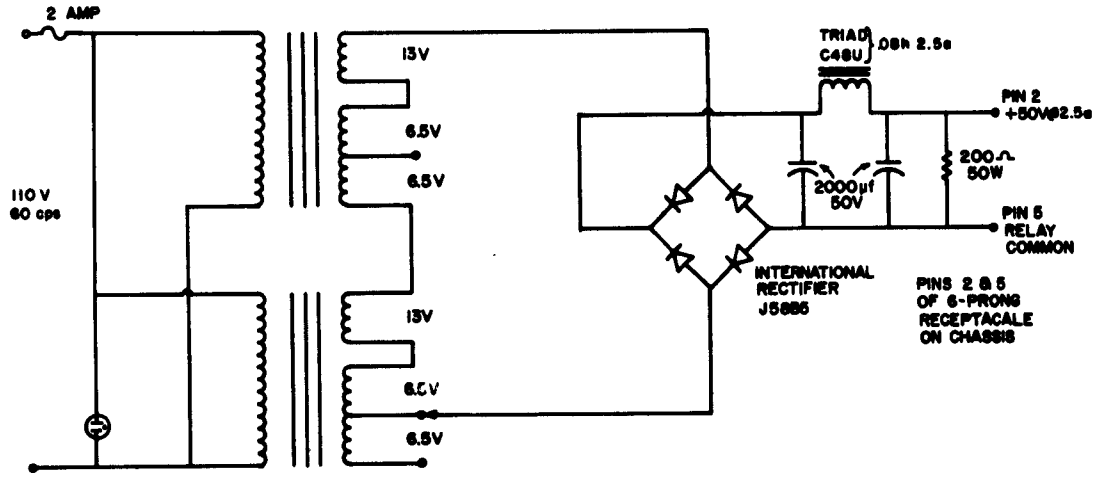

POWER SUPPLY FOR WIND SPEED CONVERSION

FIGURE 41

off the AC to the power supply in the event that regulation is lost.

Figure 39 shows the power oscillator used to supply 94-cycle 6.3-v chopper drive for the thermocouple amplifiers. The 400-cycle 6.3-v supply on this chassis was employed on the prototype station in the analog-to-digital converters but is no longer used.

The 50-v used throughout the system for control logic, though nominally this value, can vary anywhere from about 46-v to 60-v and is not supplied by the main supply but from a separate power supply shown in Fig. 40. An auxillary 50-v power supply for the wind speed conversion is shown in Fig. 41.

This concludes the section on the readout system employed in the main stations. The objective, of course, in this presentation has been to permit understanding of the functioning of these automatic stations which can and do operate continuously on an unattended basis. It is not supposed that a single reading will provide this understanding but it is believed that adequate information in the form of discussion, illustrations, and tables is present to provide such understanding.

g. Error Analysis

Any error analysis of measurement capabilities should do nothing more or less than answer the basic question "how good are the data collected with such a system." This is a difficult objective to obtain, however, for several reasons, two of the most important ones being that if the person presenting the analyses is a manufacturer of equipment, he is likely to be somewhat biased in favor of his equipment, or if he utilizes manufactured equipment, he has no alternative but to accept the manufacturer's specifications unless facilities are available to evaluate quantitatively. Such evaluation, of course, presupposes that devices exist that measure the absolute value of the parameter concerned with known error, and as far as meteorological sensors are concerned such devices do not exist.

The analysis presented here in tabular form (Table 22) tries to account for these shortcomings in assessing an error value per parameter based on the total measuring system from sensor to output without undue regard for manufacturer's claims. The values shown are based on preceding information within this report, which outlined the various calibration and checking procedures that have been employed in an attempt to accurately assess the goodness of the measured parameter values.

In order to avoid confusion, it is well to consider, for the moment, the readout system alone, the error value of which can be pinned down rather closely. The heart of this system is, of course, the NLS analog-to-digital converter (Model M24) which is rated by the manufacturer as $\pm_{\frac{1}{2}}01\%$, plus or minus one digit in the last place.

Table 22. Error Summary Main Stations

Parameter	Error
Wind Speed	±3% (cm/sec—4-min average)
Wind Direction	±5° from North
Insolation*	±.00050 cal/cm^2/sec
Albedo*	±.00050 cal/cm^2/sec
Net Radiation	±30% cal/cm^2/sec
Soil Heat Flux	Probably useless
Temperature	±.05°C(4.75-sec tracking period)

*After modification of manufacturer's gain figures.

Inasmuch as the highest parameter values encountered by the system are on the order of 45 v or less, this would indicate an error of the readout system of ±.01 v. Experience to date with this model of DVM and others manufactured by NLS would indicate that the manufacturer's claim is valid here and there is almost a virtual certainty that we can assess the system to be no worse than .02 v. (Recall that all measurements with the DVM are made on the locked ±99.99 range.) Thus, for all parameter values readout, whatever their units or scaling equivalent to the voltage output of the DVM, it may be said that the readout system contributes no more error than ±2 in the last place of any data word and ±1 may be assumed with confidence. Thermocouples are the only sensors manufactured by the project and from the results discussed under the temperature measuring system, which included all the chassis and components involved in this type of measurement, there is no question of capability of resolution to .05°C or better for dry-bulb readings. It is believed, though not fully tested as yet, that the planned modifications to the thermoshelter housing will permit wet-bulb determinations to the same degree of precision thus yielding dry-bulb—wet-bulb difference values with ±.1°C or better. These figures are outside limits and take into account errors in calibration of the thermocouple wire and non-catastrophic changes in the thermoelectric properties of the wire with time, amplifier drift, etc.

For soil heat flux errors the term "probably useless" is employed rather than "useless," because subsequent experiments may determine that the values measured today are proportional to the soil heat flux at the surface and that the difficulty rests primarily in the manufacturer's calibration figures.

3. Data Processing

Upon receipt of collected data at College Station in typewriter, tape and chart form, the first processing step is registry in appropriate logs according to the type of format, run number, tape or chart number, and station.* A run consists of one week's data, starting at 1201 hours on each Monday and ending at 1200 hours the following Monday.

Inasmuch as it has not been specifically noted before, and is perhaps less than obvious from Fig. 4, the tapes employed are not the standard 1000-ft tapes for which most tape punch mechanisms are designed. Rather, they are 5000 ft in length and the special feed and take-up reels are driven by low-speed, high-torque electric motors (Catalog 5K204, W. W. Grainger, Inc., 2425 Ferris Street, Dallas 10, Texas) demand-controlled by mercury switches. This chart length stores approximately five days of continuous collection, hence more than one tape is used per run. The chart records are coded in the field as to station, data-type, and chart number, for example, AB-21: Station A, microbarograph; chart #21 of this data-type. The capital letters used to signify chart-type should not be confused with the small letters signifying data-type in the data summary section.

Following registering, the typewriter data and the charts are stored until the tapes are rewound and converted to card form on the IBM tape-to-card converter which has the following checks incorporated in its control board and/or program card:

(1) Sign Check—This check is to determine whether one and only one sign punch is in the last column of each four-digit data word, columns 13, 17, 21, 25, . . . 73. If an error condition occurs (that is, if there is no sign punch or if there is more than one sign punch in columns 13, 17, 21, 25, . . . 73), a four is punched in column 80, indicating error in the card; but without an error light, the machine does not stop.

---

*In order to minimize the possibility of mix-up between Station A and Station B data, different-color tapes (white for A and yellow for B) and different-color inks on the three charts (wind direction, AC power/parity record, and barometric pressure) are used. The colors are black, red and violet at A; violet, green and red at B, respectively.

(2) Card-type Check—In order to permit complete interchangeability of system components at Stations A and B, the card-type punch code at both stations is identical, that is, 1, 2, 3 3, 4. However, when the tapes are converted, the tape-to-card converter recognizes (in column 1 only by an appropriate switch) that 1, 2, 3, and 4 should be punched in the cards as 6, 7, 8, and 9 respectively.

(3) Card Exit Check—On a type 1 (6) card at column 74, on a type 2 (7) card at column 34, and on a type 3 (8) and type 4 (9) card at column 42, a card-release impulse (a single punch in channel 5) exits the card if the card and tape are in step. If not, a machine stop and error light occur.

(4) Parity Check—The five-column odd-bit parity check made at Dallas is repeated on tape-to-card conversion, and an even-bit pattern causes an error light and machine stop.

Inasmuch as the standard IBM tape code is not employed (see Table 23) the program card format for tape-to-card conversion is as follows: Columns 1 and 10, no punch; columns 2 and 80, zero punch; all other columns, an EL or 12 punch.

Table 23, which follows, shows the tape codes employed on the Dallas Tower Network. It should be noted that although the coding is not standard, the IBM 0-47 has not been modified beyond installation of a single-pole double-throw switch which permits use of standard codes in one position and the Dallas Tower Network meteorological codes in the other.

After conversion from tape-to-card format (Table 6) a machine edit utilizing an IBM 1401 computer is performed as outlined below.

In general, the cards are passed through the 1401 which interrogates all 80 columns of the cards for specific test errors which are indicated on a card print-out by the addition of an alphabetic code printed in five columns on the right-hand margin of the print-out sheet. Thus, the absence of an alphabetic code to the right of a given line of print indicates that all tests for that particular line of data were met successfully.*

---

*These tests are employed for all automatic station data but are too stringent for data collected before December 1962 which marked completion of the stations from prototype design to the design outlined in this report.

Table 23. Tape Codes Employed

IBM Standard

	1	2	3	4	5	6	7	8	9	0	
8										0	
7	+		-	-							
6	+										
5			0	-	0	0			0	0	
4								0	0	0	
3				0	0	0	0				
2		0	0			0	0			0	
1	0		0		0		0		0		
	1	2	3	4	5	6	7	8	9	0	SPACE

\+ add 6 and 7
\- reverse 5 and add 7

Zero code above is not standard but required since standard zero (a single punch in 6th column) cannot be used with plus sign. Actual symbols used for zero: (no sign) is PI-1, with +, zero is SP-1, with minus, zero is PI-2.

A&M Meteorology Code through Jan. 22, 1962

	1	2	3	4	5	6	7	8	9	0		
8			+									
7				-								
6										0		0
5											0	0
4								0	0			
3				0	0	0	0					0
2		0	0			0	0					
1	0		0		0		0		0			
	1	2	3	4	5	6	7	8	9	0	SPACE	DUP

A&M Meteorology Code after Jan. 22, 1962

	1	2	3	4	5	6	7	8	9	0	
8		+									
7			-								
6											
5			0		0	0			0	0	0
4								0	0	0	
3				0	0	0	0				
2		0	0			0	0			0	
1	0		0		0		0		0		
	1	2	3	4	5	6	7	8	9	0	SPACE

Test 1 — Type 1(6), 2(7), 3(8), and 4(9) cards end in columns 73, 33, 41 and 41 respectively. Error symbol - P.

Test 2 — Each card type has a sign punch coincident with the last digit of each data word (each data word is four digits long) with the single exception that a data word composed of 9999 will not have a sign punch. The card columns for which, and only for which, a sign punch will occur are, therefore, 13, 17, 21, 25, 29, . . . 73, depending on the card type. Error symbol - P.

Test 3 — With the exception of the sign punches in the proper columns, all other columns in the active portion of each card will have one and only one numeric punch. Error symbol - P.

Test 4 — A type 1 card can follow only a type 4 or a type 2 card. Error symbol - S.

Test 5 — A type 2 card can follow only a type 1 card. Error symbol - S.

Test 6 — A type 3 card can follow only a type 2 card. Error symbol - S.

Test 7 — A type 4 card can follow only a type 3 card. Error symbol - S.

Test 8 — A type 2 card will have the same date and time as the card preceding it. Error symbol - T.

Test 9 — A type 4 card will have the same date and time as the card preceding it. Error symbol - T.

Test 10 — For a type 3 card (or 4 card) the final column of the eight-digit date and time group will be either a 0 or 5. Error symbol - T.

Test 11 — The date and time field of each card should be in proper chronological order with respect to the card preceding it, subject of course to the date and time duplication for type 1 and 2 cards and 3 and 4 cards as noted above. Error symbol - T.

Test 12 — The sixth data word in each type 2 card should be between the values 2700 and -0850. Error symbol - D.

Test 13 — The third and fourth data words of a type 2 card should not be less than -0010. Error symbol - D.

Test 14 The third data word of a type 2 card should always be equal to or greater in the algebraic sense than the fifth data word of a type 3 card unless the fifth data word should be 9999 without a sign punch. Error symbol - D.

Test 15 The first and second data words on a type 2 card should be within $\pm$0002 of the value 4000. Error symbol - R.

Test 16 On a type 1 card the second, fourth, sixth, eighth, tenth, twelfth, fourteenth, and sixteenth data words should be less respectively than the first, third, fifth, seventh, ninth, eleventh, thirteenth, and fifteenth data words unless the even data words are within $\pm$0002 of the value 4000. Error symbol - R.

Test 17 The eighth and final data word of a type 3 card should not differ by more than $\pm$0005 from the value of this data word in the previous type 3 card assuming that a previous type 3 card exists. Error symbol - N.

Test 18 The seventh data word of a type 3 card should not differ by more than $\pm$0002 from the value of the seventh data word of the previous type 3 card assuming that a previous type 3 card exists. Error symbol - N.

Test 19 In a type 4 card the first data word should be equal to or less than the second data word. The second data word, in turn, should be equal to or less than the third data word. The third data word, in turn, should be equal to or less than the fourth data word, etc. through the eight data words given in the type 4 card, with the single exception that this test does not fail if the lack of satisfaction is due to a data word on this card being 0020. Error symbol - N.

Notes: (1) Program rejects a spurious type card and does not print or retain card in deck.

(2) In a type 3 card if the difference between a card in its seventh and/or eighth data words and its predecessor in the same data words is greater than 10,000 tests 17 and 18 will fail.

Following the 1401 edit, the print-out, with error indications, is compared with the original hard copy made at Dallas and with the station log for extraction of known unreliable data, and a run summary which contains all malfunctions for the run is made from this information. As applicable, new cards will then be punched with replacement of known bad data by 9999. The corrected card deck is then run through the 1401 again for a final tabulation form with the remaining error print-out shown as a means of evaluation of the data's worthiness.

4. Data Summary

The following data summary covers all stations of the Dallas Tower Network from May 1961 (first data collection) through November 1962 and includes all data collected excepting test, calibration, or data rejected for obvious meteorological reasons. Thus, the data summarized herein are useful meteorological data in card and hard-copy format.

The summary is provided in coded form in two parts. The first gives the daily break-down per month per station according to the following conventions:

(1) If for a given day a given station was in operation for any time interval, it is shown as having been in operation for the full day by use of one or more of the data symbols listed in Table 24. For example, if on 21 June Station C was in full operation during any part of the day (full operation in the sense that all measuring systems normally employed at outlying stations were in operation), an x will be shown for that day for Station C. If it was in less than full operation, a symbol or symbols indicating the missing parameter or parameters will be used. That is, if Station C on 21 June was in full operation except for wind speed 16-m, the symbol w will be shown for that day.

(2) If for a given day a given station was not in operation, a blank is shown for that day.

(3) For the main stations (A and B) a single symbol (t, s or u) indicates all levels of measurement missing (air temperature, soil temperature or wind speed).

The second part of the data summary shows the total actual hours per month per station of available data according to the following:

(1) A blank indicates no data collected for the given month at the given station.

(2) A numeric value indicates to the nearest hour the number of hours of a given data type collected at the given station in the given month.

(3) For the main stations (A and B) a single symbol indicates all levels of measurement.

The final sheet in the second part shows the total hours per data-type per station for the over-all period.

Table 24. Data Summary Code

Symbol	Parameter	Stations
c	Dry Bulb	Main
i	Insolation	Main
j	Albedo	Main
n	Net Radiation	Main
d	Wind Direction	All
s	Soil Temperature	Main
f	Soil Heat Flux	Main
u	Wind Speed	Main
m	Microbarograph	All
t	Temperature Difference	Outlying
v	4-m Wind Speed	Outlying
w	16-m Wind Speed	Outlying
a	Thermograph	Outlying
p	AC power charts	Main
x	Full Operation	All

Data Summary—Part I

DATE	STATIONS									
	A	B	C	D	E	F	G	H	I	J
May 1961										
1-9										
10-11	m,p									
12-31										
June 1961										
1-15										
16-20								x		
21			x	a				x		
22			x	x		x	x	x		
23-25			x	x	x	x	x	x	x	x
26			x	x	x	v	x	x	x	x
27-28			x	x	a,m	v	x	x	x	x
29-30			x	a	a,m	x	x	x	x	x
July 1961										
1-6			x	x	a,m	x	x	x	x	x
7-16			x	x	x	x	x	x	x	x
17-22										
23-28	m,p									
29-31										
Aug 1961										
1-6										
7	p									
8	p					x	x	x	v	
9	p		x	x		x	x	x	v	x
10	x		x	x		x	x	x	v	x
11	x		x	x	m	x	x	x	v	x
12-16	x		x	x	m	x	x	x	x	x
17	x		x	x	m	v,d	x	x	x	x
18			x	x	m	v,d	x	x	x	x
19	c,i,j, n,d,s, f,u,p		x	x	d,m	v,d	x	x	x	d
20	c,i,j, n,d,s, f,u,p		x	x	d,m				x	d
21	c,i,j, n,d,s, f,u,p									
22-24	p									
25-27	c,i,j, n,d,s, f,u,p									
28-31										

Data Summary—Part I (Continued)

DATE	STATIONS									
	A	B	C	D	E	F	G	H	I	J
Sept 1961										
1-30										
Oct 1961										
1-14										
15	m									
16-19	x									
20-26	x							x		
27	d							x		
28	d							v,a,m		
29-30	x							v,a,m		
31	x	c,i,j, n,d,s f,u,m						v,a,m		
Nov 1961										
1	x	c,i,j, n,d,s, f,u,m								
2		c,i,j, n,d,s, f,u,m								
3	x	c,i,j, n,d,s, f,u,m								
4-12	m	c,i,j, n,d,s, f,u,m								
13	m	m	a,m	a,m		a,m				m
14-16	m	m	a,m	a,m	a,m	m	m	a,m	a,m	m
17-21	m	m	m	a,m	a,m	m	m	a,m	a,m	m
22-23	m	m	m	a,m	a,m	a,m	m	a,m	a,m	m
24-25	m	c,i,j, n,s,f, u,d,m	m	a,m	a,m	a,m	m	a,m	a,m	m
26	c,i,j, n,d,s, f,u,m	c,i,j, n,d,s, f,u,m	m	a,m	a,m	a,m	m	a,m	a,m	m
27-28			m	a,m	a,m	a,m	m	a,m	a,m	m
29-30		m	a,m	a,m	a,m	a,m	a,m	a,m	a,m	a,m

Data Summary—Part I (Continued)

DATE	STATIONS									
	A	B	C	D	E	F	G	H	I	J
Dec 1961										
1-2		m	a,m	a,m	a,m	a,m	a,m	a,m	a,m	a,m
3-7	s,f,c, p,m	m	a,m	a,m	a,m	a,m	a,m	a,m	a,m	a,m
8	s,f, c,m	m	a,m	a,m	a,m	a,m	a,m	a,m	a,m	a,m
9	s,f, c,m	p,m	a,m	a,m	a,m	a,m	a,m	a,m	a,m	a,m
10	s,f c,m		a,m	a,m	a,m	a,m	a,m	a,m	a,m	a,m
11-12	s,f,c, m,d	p,m	a,m	a,m	a,m	a,m	a,m	a,m	a,m	a,m
13-14	s,f, c,m	p,m	a,m	a,m	a,m	a,m	a,m	a,m	a,m	a,m
15-18	s,f, c,m	m	a,m	a,m	a,m	a,m	a,m	a,m	a,m	a,m
19		c,i,j, n,d,s, f,u,m	a,m	a,m	a,m	a,m	a,m	a,m	a,m	a,m
20		c,i,j, n,d,s, f,u,m								
21-31										
Jan 1962										
1-14										
15-18	x									
19	p									
20-28										
29	m									
30	x					a,m	a,m	a,m	a,m	
31	x		x	a,m	a,m	a,m	a,m	a,m	a,m	m
Feb 1962										
1	x	m	x	a,m	m	m	a,m	a,m	a,m	m
2-12	x	x	x	a,m	m	m	a,m	a,m	a,m	m
13-14	x	x	x	a,m	m	m	m	a,m	a,m	m
15	x	x	x	a,m	m	m	m	a,m	m	m
16-21	p	x	x	a,m	m	m	x	a,m	m	a,m
22	p	x	x		m		x		m	
23-24	x	x	x		m		x		m	
25-27	x	x	x		m		x		m	
28	x	x	x				x		m	

Data Summary—Part I (Continued)

DATE	STATIONS									
	A	B	C	D	E	F	G	H	I	J
March 1962										
1-5	x	x	x		m		x		m	
6-11	x	x	x		a,m		x		m	
12-13	x	x	x		a,m		x		x	
14-19	x	x	x		m		x		x	
20-22	d	x	x		m		x		x	
23	x	x	x		m		x		x	
24-25	x	x	m		m		x		x	
26-29	x	j	x		m		x		x	
30-31	x	j	a		m		x		x	
April 1962										
1	x	j	a		m		x		x	
2-3	x	j	x		m		x		x	
4-5	x	j,d	x		m		x		x	
6	x	j	x		m		x		x	
7	m	j	x		m		x		x	
8-9	x	j	x		m		x		x	
10-13	x	j	x		a,m		x		x	
14	x	j	x		a,m		a,m		a,m	
15	x	j								
16	x	j,f								
17-20	f	j,f								
21-30	f	j								
31	f,j	j,f								
May 1962										
1-14	j	j,f								
15-16	j,f	j,f								
17-24	j,f	c,i,j, n,d,s, f,u								
25-31	j,f	j,f								
June 1962										
1	j,f	j,f								
2-8	j,f	c,j,i, n,d,s, f,u								
9-15	j,f	j,f								
16	j,f	c,i,j, n,d,s, f,u								
17-30	j,f	j,f								

Data Summary—Part I (Continued)

DATE	STATIONS									
	A	B	C	D	E	F	G	H	I	J
July 1962										
1	j,f	j,f								
2-4	j,f	j,f,i								
5-7	j,f	j,f								
8-9	j,f	c,i,j, n,s,f, u,d								
10-16	j,f	j,f								
17-26	c,i,j, n,d,s, f,u	j,f								
27	j,f	j,f								
28	j,f	c,j,f								
29	i,j,f	c,j,f								
30-31	i,j,f	j,f								
Aug 1962										
1-2	j,f	c,i,j, n,d,s, f,u								
3-4	j,f	c,i,j, n,d,s, f,u,p								
5-10	j,f	j,f								
11	m,j,f	j,f								
12-14	c,i,j, n,d,s, f,u,p	j,f								
15-16	c,i,j, n,d,s, f,u,p	p,j,f								
17-19	p,j,f	p,j,f								
20-27	c,i,j, n,d,s, f,u,p									
28	p,j,f									
29-31	c,i,j, n,d,s, f,u,p									
Sept 1962										
1-13	c,i,j, n,d,s, f,u,p									

Data Summary—Part I (Continued)

DATE	STATIONS									
	A	B	C	D	E	F	G	H	I	J
Sept 1962 (Continued)										
14-15	c,i,j, n,d,s, f,u,p	j,m,p n,f								
16	j,n, f,p	j,n,f, m,p								
17-21	j,n, f,p									
22-25	c,i,j, n,d,s, f,u,p									
26-30	j,n, f,p									
Oct 1962										
1-5	j,f									
6-7	c,i,j, n,d,s, f,u									
8-21	j,f									
22-31	c,i,j, n,d,s, f,u,m									
Nov 1962										
1-13										
14-17	j,f									
18-19	j,f	c,i,j, n,d,s, f,u,m								
20-21	j,f	c,i,j, n,d,s, f,u								
22-24	c,i,j, n,d,s, f,u	c,i,j, n,d,s, f,u								
25		c,i,j, n,d,s, f,u,m								
26	j,f,m	c,i,j, n,d,s, f,u								
27-28	j,f,m	j,f								
29-30	j,f	j,f								

Data Summary—Part II

MAIN STATIONS				OUTLYING STATIONS									
Type of Data	Sta A	Sta B	TOTAL	Type of Data	Sta C	Sta D	Sta E	Sta F	Sta G	Sta H	Sta I	Sta J	TOTAL
May 1961													
c	16	0	16	t	0	0	0	0	0	0	0	0	0
i	16	0	16	v	0	0	0	0	0	0	0	0	0
j	16	0	16	w	0	0	0	0	0	0	0	0	0
n	16	0	16	d	0	0	0	0	0	0	0	0	0
d	16	0	16	m	0	0	0	0	0	0	0	0	0
s	4	0	4	a	0	0	0	0	0	0	0	0	0
f	4	0	4										
u	4	0	4										
m	0	0	0										
p	0	0	0										
June 1961													
c	0	0	0	t	223	224	175	202	181	331	182	179	1695
i	0	0	0	v	223	220	175	120	198	327	182	179	1624
j	0	0	0	w	222	221	175	202	198	326	182	175	1701
n	0	0	0	d	186	220	175	202	198	327	182	177	1667
d	0	0	0	m	236	230	70	298	198	512	183	179	1906
s	0	0	0	a	282	144	70	198	199	335	183	182	1593
f	0	0	0										
u	0	0	0										
m	0	0	0										
p	0	0	0										
July 1961													
c	86	0	86	t	371	374	374	372	370	372	370	371	2974
i	86	0	86	v	362	373	374	372	370	371	370	347	2939
j	86	0	86	w	377	373	368	372	369	370	370	381	3980
n	86	0	86	d	377	376	374	372	370	333	370	381	2953
d	86	0	86	m	372	375	217	377	375	371	373	373	2833
s	22	0	22	a	353	0	199	376	373	374	373	373	2421
f	22	0	22										
u	22	0	22										
m	0	0	0										
p	0	0	0										
Aug 1961													
c	258	0	258	t	259	259	219	269	267	265	281	242	2061
i	258	0	258	v	260	240	215	188	267	265	193	239	1867
j	258	0	258	w	260	239	219	269	267	265	281	239	2039
n	258	0	258	d	260	245	172	188	267	265	281	190	1868
d	258	0	258	m	260	262	0	270	268	266	281	261	1868
s	64	0	64	a	260	0	219	269	220	266	257	261	1752

Data Summary—Part II (Continued)

MAIN STATIONS				OUTLYING STATIONS									
Type of Data	Sta A	Sta B	TOTAL	Type of Data	Sta C	Sta D	Sta E	Sta F	Sta G	Sta H	Sta I	Sta J	TOTAL
Aug 1961 (Continued)													
f	64	0	64										
u	64	0	64										
m	340	0	340										
p	199	0	199										
Sept 1961													
c	0	0	0	t	0	0	0	0	0	0	0	0	0
i	0	0	0	v	0	0	0	0	0	0	0	0	0
j	0	0	0	w	0	0	0	0	0	0	0	0	0
n	0	0	0	d	0	0	0	0	0	0	0	0	0
d	0	0	0	m	0	0	0	0	0	0	0	0	0
s	0	0	0	p	0	0	0	0	0	0	0	0	0
f	0	0	0										
u	0	0	0										
m	0	0	0										
p	0	0	0										
Oct 1961													
c	310	0	310	t	0	0	0	0	0	264	0	0	264
i	310	0	310	v	0	0	0	0	0	167	0	0	167
j	310	0	310	w	0	0	0	0	0	264	0	0	264
n	310	0	310	d	0	0	0	0	0	264	0	0	264
d	233	0	233	m	0	0	0	0	0	168	0	0	168
s	77	0	77	a	0	0	0	0	0	168	0	0	168
f	77	0	77										
u	77	0	77										
m	314	0	314										
p	408	107	515										
Nov 1961													
c	460	194	654	t	416	416	377	389	372	373	371	388	3102
i	460	194	654	v	416	416	394	389	372	397	373	388	3145
j	460	194	654	w	419	416	370	389	372	373	373	388	3100
n	460	194	654	d	416	416	394	389	372	373	373	388	3121
d	460	194	654	m	0	0	0	0	0	0	0	0	0
s	115	48	163	a	262	0	0	501	335	0	0	167	1265
f	115	48	163										
u	115	48	163										
m	42	0	42										
p	563	691	1254										

Data Summary—Part II (Continued)

MAIN STATIONS				OUTLYING STATIONS								
Type of Data	Sta A	Sta B	TOTAL	Type of Data	Sta C	Sta D	Sta E	Sta F	Sta G	Sta H	Sta I	Sta J	TOTAL
Dec 1961													
c	0	277	277	t	447	447	448	436	447	448	449	446	3568
i	282	277	559	v	445	435	448	446	442	448	449	446	3559
j	282	277	559	w	440	431	438	446	447	449	449	446	3546
n	282	277	559	d	424	431	439	446	445	449	449	430	3513
d	234	277	511	m	0	0	0	0	0	0	0	0	0
s	0	69	69	a	0	0	0	0	0	0	0	0	0
f	0	69	69										
u	71	69	140										
m	0	0	0										
p	234	298	532										
Jan 1962													
c	82	0	82	t	8	7	6	32	31	32	30	9	155
i	82	0	82	v	8	7	6	32	31	32	30	9	155
j	82	0	82	w	8	7	6	32	31	32	30	9	155
n	82	0	82	d	8	7	6	32	31	32	30	9	155
d	82	0	82	m	8	0	0	0	0	0	0	0	8
s	21	0	21	a	8	0	0	0	0	0	0	10	18
f	21	0	21										
u	21	0	21										
m	116	0	116										
p	113	0	113										
Feb 1962													
c	534	414	947	t	669	493	670	488	661	489	670	491	4631
i	534	414	947	v	669	493	670	488	662	489	670	491	4632
j	534	414	947	w	669	493	670	440	661	489	670	491	4583
n	534	414	947	d	669	493	670	462	660	489	670	491	4604
d	534	414	947	m	576	0	0	0	213	0	0	0	789
s	133	104	237	a	739	0	663	466	343	0	278	326	2815
f	133	104	237										
u	133	104	237										
m	652	547	1199										
p	467	672	1139										
March 1962													
c	598	490	1088	t	743	0	743	0	740	0	742	0	2968
i	598	490	1088	v	743	0	743	0	742	0	742	0	2970
j	598	346	944	w	743	0	743	0	742	0	742	0	2970
n	598	490	1088	d	743	0	743	0	742	0	742	0	2970
d	526	490	1016	m	650	0	0	0	708	0	461	0	1819
s	149	122	271	a	687	0	509	0	705	0	773	0	2674

Data Summary—Part II (Continued)

MAIN STATIONS				OUTLYING STATIONS									
Type of Data	Sta A	Sta B	TOTAL	Type of Data	Sta C	Sta D	Sta E	Sta F	Sta G	Sta H	Sta I	Sta J	TOTAL
March 1962 (Continued)													
f	149	122	271										
u	149	122	271										
m	727	800	1527										
p	718	696	1414										
April 1962													
c	316	459	775	t	322	0	323	0	422	0	327	0	1394
i	316	459	775	v	322	0	323	0	422	0	327	0	1394
j	292	0	292	w	322	0	323	0	422	0	327	0	1394
n	316	459	775	d	322	0	323	0	422	0	327	0	1394
d	316	421	737	m	321	0	0	0	304	0	305	0	930
s	79	115	194	a	279	0	205	0	304	0	305	0	1093
f	33	91	124										
u	79	115	194										
m	647	715	1326										
p	682	717	1399										
May 1962													
c	598	346	944	t	0	0	0	0	0	0	0	0	0
i	598	346	944	v	0	0	0	0	0	0	0	0	0
j	0	0	0	w	0	0	0	0	0	0	0	0	0
n	598	346	944	d	0	0	0	0	0	0	0	0	0
d	598	346	944	m	0	0	0	0	0	0	0	0	0
s	150	86	236	a	0	0	0	0	0	0	0	0	0
f	80	0	80										
u	150	86	236										
m	712	741	1453										
p	911	743	1654										
June 1962													
c	530	365	895	t	0	0	0	0	0	0	0	0	0
i	530	365	895	v	0	0	0	0	0	0	0	0	0
j	0	0	0	w	0	0	0	0	0	0	0	0	0
n	530	365	895	d	0	0	0	0	0	0	0	0	0
d	530	365	895	m	0	0	0	0	0	0	0	0	0
s	132	91	223	a	0	0	0	0	0	0	0	0	0
u	132	91	223										
m	688	708	1396										
p	703	720	1423										
f	0	0	0										

Data Summary—Part II (Continued)

MAIN STATIONS				OUTLYING STATIONS								
Type of Data	Sta A	Sta B	TOTAL	Type of Data	Sta C	Sta D	Sta E	Sta F	Sta G	Sta H	Sta I	Sta J	TOTAL
July 1962													
c	446	484	930	t	0	0	0	0	0	0	0	0	0
i	370	465	835	v	0	0	0	0	0	0	0	0	0
j	0	0	0	w	0	0	0	0	0	0	0	0	0
n	446	522	968	d	0	0	0	0	0	0	0	0	0
d	446	522	968	m	0	0	0	0	0	0	0	0	0
s	112	130	242	a	0	0	0	0	0	0	0	0	0
f	0	0	0										
u	112	130	242										
m	757	770	1527										
p	743	743	1486										
Aug 1962													
c	240	247	487	t	0	0	0	0	0	0	0	0	0
i	240	247	487	v	0	0	0	0	0	0	0	0	0
j	0	0	0	w	0	0	0	0	0	0	0	0	0
n	240	247	487	d	0	0	0	0	0	0	0	0	0
d	240	247	487	m	0	0	0	0	0	0	0	0	0
s	60	62	122	a	0	0	0	0	0	0	0	0	0
f	0	0	0										
u	60	62	122										
m	694	415	1109										
p	224	85	309										
Sept 1962													
c	141	39	180	t	0	0	0	0	0	0	0	0	0
i	141	39	180	v	0	0	0	0	0	0	0	0	0
j	0	0	0	w	0	0	0	0	0	0	0	0	0
n	0	0	0	d	0	0	0	0	0	0	0	0	0
d	141	39	180	m	0	0	0	0	0	0	0	0	0
s	35	10	45	a	0	0	0	0	0	0	0	0	0
f	0	0	0										
u	35	10	45										
m	683	0	683										
p	0	0	0										
Oct 1962													
c	150	0	150	t	0	0	0	0	0	0	0	0	0
i	150	0	150	v	0	0	0	0	0	0	0	0	0
j	0	0	0	w	0	0	0	0	0	0	0	0	0
n	150	0	150	d	0	0	0	0	0	0	0	0	0
d	150	0	150	m	0	0	0	0	0	0	0	0	0
s	37	0	37	a	0	0	0	0	0	0	0	0	0

Data Summary—Part II (Continued)

MAIN STATIONS				OUTLYING STATIONS									
Type of Data	Sta A	Sta B	TOTAL	Type of Data	Sta C	Sta D	Sta E	Sta F	Sta G	Sta H	Sta I	Sta J	TOTAL
Oct 1962 (Continued)													
f	0	0	0										
u	37	0	37										
m	516	0	516										
p	536	0	536										
Nov 1962													
c	192	75	267	t	0	0	0	0	0	0	0	0	0
i	192	75	267	v	0	0	0	0	0	0	0	0	0
j	0	0	0	w	0	0	0	0	0	0	0	0	0
n	192	75	267	d	0	0	0	0	0	0	0	0	0
d	192	75	267	m	0	0	0	0	0	0	0	0	0
s	48	19	67	a	0	0	0	0	0	0	0	0	0
f	0	0	0										
u	48	19	67										
m	251	191	442										
p	342	212	554										

Data Summary—Part II: Total Hours of Data Taken from 1 May 1961 to 30 November 1962 by Stations and Types

MAIN STATIONS				OUTLYING STATIONS									
Type of Data	Sta A	Sta B	TOTAL	Type of Data	Sta C	Sta D	Sta E	Sta F	Sta G	Sta H	Sta I	Sta J	TOTAL
c	4957	3390	8347	t	3458	2220	3335	2188	3491	2574	3422	2126	22,814
i	5163	3370	8533	v	3448	2184	3348	2035	3506	2496	3336	2099	22,452
j	2918	1231	4149	w	3460	2180	3312	2150	3509	2568	3424	2129	22,732
n	5098	3389	8487	d	3405	2188	3296	2091	3507	2532	3424	2066	22,509
d	5042	3390	8432	m	2423	867	287	945	2066	1317	1603	813	10,321
s	1238	856	2094	a	2870	144	1865	1810	2479	1143	2174	1319	13,804
f	608	434	1042										
u	1309	846	2165										
m	7139	4887	12,026										
p	6843	5684	12,527										

REFERENCES

1. "Design of Experimental Meteorological Simulators," Final Report, Signal Corps Contract DA 36-039 SC-74975, Texas A&M Research Foundation, Project 167, April 1958.

2. "Design of the Mobile Micrometeorological Stations Employed on Project Green Glow," Final Report, Geophysics Research Directorate, AFCRC Contract AF 19(604)-4562, Texas A&M Research Foundation, Project 193, July 1959.

3. "Wind Measuring Set AN/GMQ-12," Department of the Army Technical Manual No. 11-2446 (Washington, D.C., U. S. Government Printing Office: 1957—4C0619).

4. "Forecasting Micrometeorological Variables," Final Report, Geophysics Research Directorate, AFCRC Contract AF 19(604)-1117, Texas A&M Research Foundation, Project 93, March 1957.

5. "Micrometeorology of the Surface Layer of the Atmosphere, the Flux of Momentum, Heat, and Water Vapor," Final Report, Geophysics Research Directorate, AFCRC Contract AF 19(604)-289, The Johns Hopkins University Laboratory of Climatology, 1954.

PERSONNEL

1 March 1960 - 31 January 1963

Clayton, William H.*	Principal Investigator		
Alexander, Linda C.	Stenographer	Terminated	9/11/62
Brady, Helen J.	Secretary		
Brent, Mary Anne	Computer I		
Briggs, Kenneth W.	Engineering Aide I	Terminated	8/31/62
Burris, Charles E.	Engineering Aide II		
Byer, Eugene W.	Engineering Aide I	Terminated	7/31/62
Carter, Oscar, Jr.	Senior Technician	Terminated	10/31/62
Clayton, Eldon G.	Technical Assistant I	Terminated	6/20/60
Darr, Barbara	Computer I		
Earle, Theresa	Stenographer	Terminated	7/31/61
Eckelkamp, B. Jesse*	Research Scientist III		
Henderson, Jackie S.	Stenographer	Terminated	1/31/62
Hughey, Karen L.	Computer I	Terminated	7/31/62
Hutto, Mary Jane	Computer I	Terminated	2/20/62
Jackson, Wilbur M.	Engineering Aide II		
Keller, Annette	Computer II	Terminated	9/11/62
LaMotte, Lynn Roy	Technical Assistant		
Luther, H. A. M.	Senior Technician	Terminated	2/28/62
McMath, Ruth Ann	Computer II		
McMath, Wallis	Student Assistant	Terminated	7/31/62
Magee, Patricia	Computer I		
Piraino, Lee L.	Engineering Aide III	Terminated	4/30/61
Quddus, Md. Abdul	Engineering Aide III	Terminated	5/31/62
Restivo, Anthony L.	Technical Assistant II		
Robertson, Martha	Computer Aide	Terminated	7/15/60
Roskey, H. C.	Engineering Aide III	Terminated	10/31/61
Snelgrove, A. Marie	Computer II	Terminated	4/30/62
Springer, Barbara	Computer I	Terminated	8/31/62
Thomas, Donald L.	Student Assistant	Terminated	10/31/62
Vos, Geertruida	Computer Aide	Terminated	11/ 2/60
Woodworth, Leonard F.	Engineering Aide III	Terminated	3/31/62
York, H. Andrew	Senior Technician		

*Scientists and engineers who contributed to the work reported.

DISTRIBUTION LIST

Contract AF 19(604)-6200

A. U.(Library) 1
Maxwell AFB, Alabama

AFCRL, OAR (CRXRA) Stop 39 10
L. G. Hanscom Field
Bedford, Massachusetts

ESD (ESRDG) 1
L. G. Hanscom Field
Bedford, Massachusetts

ASD (ASAPRD-Dist) 1
Wright-Patterson AFB, Ohio

Hq. USAF (AFRDR) 1
Washington 25, D.C.

ARL (ARA-2) 1
Library AFL 2292, Building 450
Wright-Patterson AFB, Ohio

Defence Research Member 1
Canadian Joint Staff
2450 Massachusetts Ave., N.W.
Washington 8, D.C. (U)

ASTIA (TIPAA) 10
Arlington Hall Station
Arlington 12, Virginia

Documents Expediting Project
(UNIT X) 1
Library of Congress
Washington 25, D.C. (U)

Hq. AFCRL, OAR (CRZHB,
William P. Elliott)
L. G. Hanscom Field
Bedford, Massachusetts

Hq. 2nd Weather Group 1
Langley AFB, Virginia

Climatic Center USAF 1
Annex 2, 225 D Street, S.E.
Washington 25, D.C.

Hq. 4th Weather Group 1
Andrews AFB
Washington 25, D.C.

Dr. Robert Fletcher 1
Air Weather Service (MATS)
Scott AFB, Illinois

Meteorology Department 1
U.S.A.E.P.C.
Fort Huachuca, Arizona 1

Mr. K. L. Calder 1
Biological Warfare Laboratories
Fort Detrick
Frederick, Maryland

Mr. Donald Shearer 1
Meteorology Division
Dugway Proving Ground
Fort Detrick
Frederick, Maryland

Dr. George Milly 1
Technical Command
Army Chemical Center, Maryland

Dr. C. H. B. Priestley 1
Division of Meteorological Physics
CSIRO
Aspendale, Victoria, Australia

Dr. E. L. Deacon 1
Division of Meteorological Physics
CSIOR
Aspendale, Victoria, Australia

Department of Meteorology 1
McGill University
Montreal, Canada

Dr. Jiro Sakagami 1
Department of Physics
Ochanomizu University
Bunkyo-Ku
Tokyo, Japan

Chemical Defence Experimental Establishment 1
Porton, near Salisbury
England

Dr. H. Charnock 1
National Institute of Oceanography
Wormley Godalming
Surrey, England

Dr. V. P. Subrahmanyan 1
Department of Geophysics
Audhra University
Waltair, India

Dr. Eiishi Inoue 1
National Institute of the Agricultural Sciences
Nishigohara
Tokyo, Japan

Geophysics Institute 1
Tohoku University
Sendai, Japan

Dr. Kiyohide Takeuchi 1
Japan Meteorological Agency
Otemachi, Chiyoda-Ku
Tokyo, Japan

Dr. F. Wippermann 1
Technische Hochaschuke
Meteorologishes Institut
Darmstadt, Germany

Docent Bertil I. Wedin 1
FOA 1
Swedish Research Center of Defense
Sundbyberg 4, Sweden

Dr. H. Merbt 1
Royal Institute of Technology
Division of Aeronautics
Stockholm 70, Sweden

Dr. P. Courvoisier 1
Reaktor Ltd.
Wuerenlingen
Aargau, Switzerland

Dr. C. Morales 1
Meteorological Institution
Uppsala, Sweden

Prof. D. A. deVries 1
Technische Hogeschool
Insulindelaan
Eindhoven, Netherlands

Dr. Werner Klug
Technische Hochschule
Darmstadt, West Germany

Dr. C. H. M. van Bavel 1
Agricultural Research Service
S. W. Water Conservation Laboratory
Tempe, Arizona

National Center for Atmospheric Research 1
Boulder, Colorado

Mr. Norman Islitzer 1
U. S. Weather Bureau
c/o U. S. Atomic Energy Commission
Box 1221
Idaho Falls, Idaho

Mr. Donald Fuquay 1
Northern Forest Fire Research Laboratory
U. S. Forest Service
Missoula, Montana

Weather Bureau Research Station 1
c/o U. S. Atomic Energy Commission
Post Office Box 2088
Las Vegas, Nevada

Dr. Frank Gifford 1
Meteorologist-in-Charge
U. S. Weather Bureau
Oak Ridge, Tennessee

Mr. Joshua Z. Holland 1
Division of Biology and Medicine
U. S. Atomic Energy Commission
Washington 25, D.C.

Dr. Lester Machta 1
Special Projects Section
U. S. Weather Bureau
Washington 25, D.C.

Mr. Donald Pack 1
Special Projects Section
Office of Meteorological Research
U. S. Weather Bureau
Washington, D.C.

Dr. Glenn R. Hilst 1
Travelers Research Center
650 Main Street
Hartford, Connecticut

Mr. Harry Moses 1
Meteorology Group
Argonne National Laboratory
Post Office Box 299
Lamont, Illinois

Woods Hole Oceanographic Institute 1
Woods Hole, Massachusetts

Mr. Maynard Smith 1
Brookhaven National Laboratory
Upton, Long Island, New York

Dr. Robert M. McCormick 1
Robert A. Taft Sanitary Engr. Center
Columbia Parkway
Cincinnati 26, Ohio

Dr. F. N. Frenkiel 1
Applied Mathematics Laboratory
David Taylor Model Basin
Washington 7, D.C.

Mr. James J. Fuquay 1
Atmospheric Physics,
622 Bldg. 200 W.
General Electric Company
Richland, Washington

Dr. Earl Gossard 1
U. S. Navy Electronics Laboratory
San Diego, California

Department of Meteorology 1
University of Arizona
Tucson, Arizona

Mr. F. A. Brooks 1
Department of Agricultural Engrg.
University of California
Davis, California

Department of Meteorology 1
University of California
Los Angeles, California

Prof. William E. Reifsnyder 1
School of Forestry
Yale University
New Haven 11, Connecticut

Department of Meteorology 1
Florida State University
Tallahassee, Florida

Department of Oceanography and Meteorology 1
University of Hawaii
Honolulu 2, Hawaii

Prof. John E. Pearson 1
Department of General Engineering
University of Illinois
Urbana, Illinois

Department of Physics and Astronomy
State University of Iowa
Iowa City, Iowa

Mechanical Engineering Dept. 1
The Johns Hopkins University
Baltimore 18, Maryland

Round Hill Field Station 1
Massachusetts Institute of Technology
South Dartmouth, Massachusetts

Meteorological Laboratories 1
Dept. of Engineering Mechanics
University of Michigan
Ann Arbor, Michigan

Prof. E. R. Lemon 1
Soil Management Research
Bailey Hall, Cornell University
Ithaca, New York

Dept. of Meteorology and Oceanography 1
New York University
University Heights
New York 53, New York

Department of Meteorology 1
The Pennsylvania State University
University Park, Pennsylvania

Dept. of Oceanography and Meteorology
Texas A&M College
College Station, Texas

Electrical Engrg. Research Laboratory 1
University of Texas
Box 8026, University Station
Austin, Texas

Department of Meteorology 1
University of Utah
Salt Lake City, Utah

Dept. of Meteorology and Climatology 1
University of Washington
Seattle 5, Washington

Dept. of Meteorology 1
University of Wisconsin
Madison, Wisconsin

Scripps Institution of Oceanography 1
La Jolla, California

Dr. John F. Gabites 1
Officer in Charge of Research
New Zealand Meteorological Service
P. O. Box 722
Wellington, New Zealand

AD _____

Geophysics Research Directorate
Air Force Cambridge Research Laboratories
Laurence G. Hanscom Field
Bedford, Mass.

AN AUTOMATIC MICROMETEOROLOGICAL DATA-COLLECTION STATION, 129 pp. incl. tables and schematics, February 1963. (AFCRL-63-418) Unclassified Report.

Final report prepared by
William H. Clayton.
Air Force Contract AF 19(604)-6200.

This report reviews the design and operation of an automatic micrometeorological measuring station based on a prototype developed on Contract AF 19(604)-4562 for use on Project Green Glow. Full information in the form of description and schematic diagrams sufficient to permit duplication is provided. Also included is a summary of the data collected through November 1962 on the Dallas Tower Network, of which this station, located at the KRLD-WFAA television transmitter site near Cedar Hill, Texas, is Station A.

UNCLASSIFIED

1. Instrumentation
2. Micrometeorological Data

AD _____

Geophysics Research Directorate
Air Force Cambridge Research Laboratories
Laurence G. Hanscom Field
Bedford, Mass.

AN AUTOMATIC MICROMETEOROLOGICAL DATA-COLLECTION STATION, 129 pp. incl. tables and schematics, February 1963. (AFCRL-63-418) Unclassified Report.

Final report prepared by
William H. Clayton.
Air Force Contract AF 19(604)-6200.

This report reviews the design and operation of an automatic micrometeorological measuring station based on a prototype developed on Contract AF 19(604)-4562 for use on Project Green Glow. Full information in the form of description and schematic diagrams sufficient to permit duplication is provided. Also included is a summary of the data collected through November 1962 on the Dallas Tower Network, of which this station, located at the KRLD-WFAA television transmitter site near Cedar Hill, Texas, is Station A.

UNCLASSIFIED

1. Instrumentation
2. Micrometeorological Data

AD _____

Geophysics Research Directorate
Air Force Cambridge Research Laboratories
Laurence G. Hanscom Field
Bedford, Mass.

AN AUTOMATIC MICROMETEOROLOGICAL DATA-COLLECTION STATION, 129 pp. incl. tables and schematics, February 1963. (AFCRL-63-418) Unclassified Report.

Final report prepared by
William H. Clayton.
Air Force Contract AF 19(604)-6200.

This report reviews the design and operation of an automatic micrometeorological measuring station based on a prototype developed on Contract AF 19(604)-4562 for use on Project Green Glow. Full information in the form of description and schematic diagrams sufficient to permit duplication is provided. Also included is a summary of the data collected through November 1962 on the Dallas Tower Network, of which this station, located at the KRLD-WFAA television transmitter site near Cedar Hill, Texas, is Station A.

UNCLASSIFIED

1. Instrumentation
2. Micrometeorological Data

AD _____

Geophysics Research Directorate
Air Force Cambridge Research Laboratories
Laurence G. Hanscom Field
Bedford, Mass.

AN AUTOMATIC MICROMETEOROLOGICAL DATA-COLLECTION STATION, 129 pp. incl. tables and schematics, February 1963. (AFCRL-63-418) Unclassified Report.

Final report prepared by
William H. Clayton.
Air Force Contract AF 19(604)-6200.

This report reviews the design and operation of an automatic micrometeorological measuring station based on a prototype developed on Contract AF 19(604)-4562 for use on Project Green Glow. Full information in the form of description and schematic diagrams sufficient to permit duplication is provided. Also included is a summary of the data collected through November 1962 on the Dallas Tower Network, of which this station, located at the KRLD-WFAA television transmitter site near Cedar Hill, Texas, is Station A.

UNCLASSIFIED

1. Instrumentation
2. Micrometeorological Data